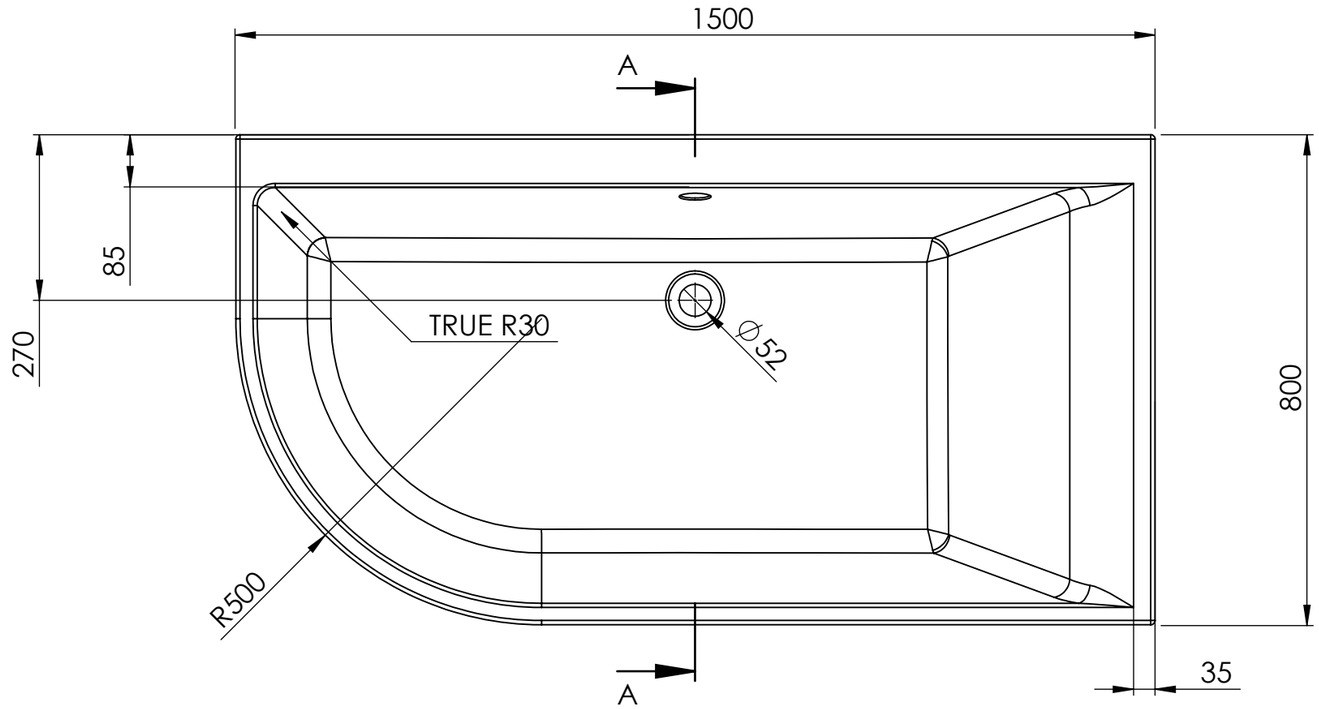

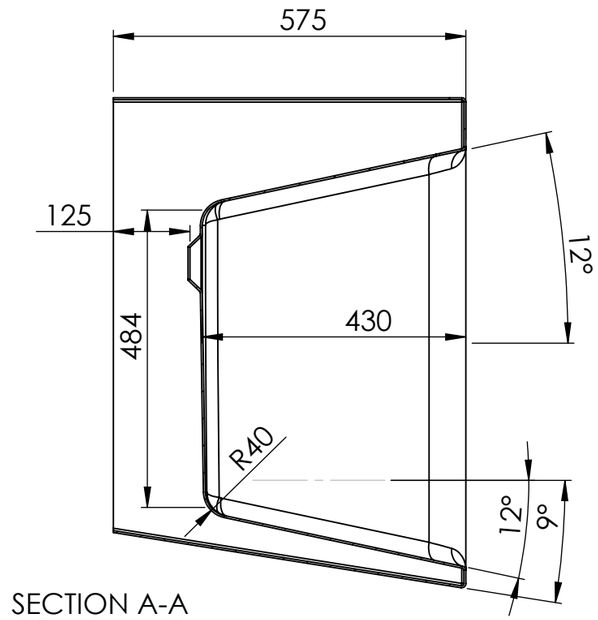

SECTION A-A
SCALE 1 : 10

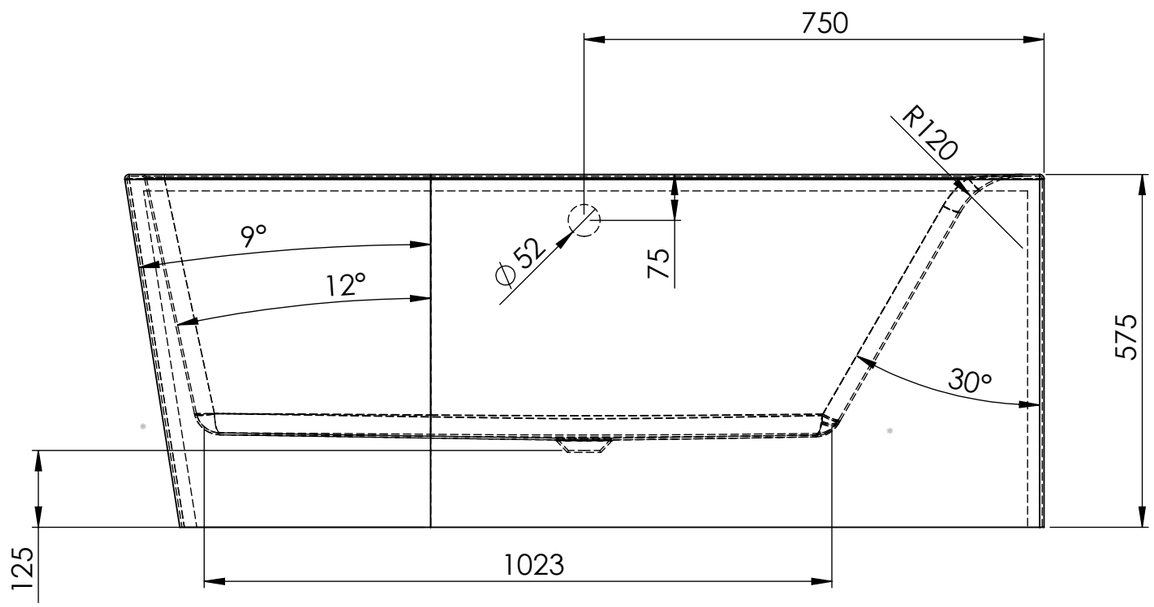

bcdesigns

Material : Acrylic

Waste/ Over flow : not included

Date: 18.10.2021

Dim In mm

Tolerances : +/- 5mm

Product:
The Calverton
150x80x57.5 cm RH

Sheet A3