Instruction Manual

Powered Press Tools

Due to continuing improvements, actual product may differ slightly from the product described herein.

Read this material before using this product. Failure to do so can result in serious injury. Save instructions for future reference.

BASTION
INDUSTRIES

Contents

01
Important Safety Information

02
General Safety Warnings

03
Tool Specific Safety Rules

04
Understanding Your Press Tool

05
Description of Components

06
Operating Instructions

07
Maintenance and Servicing

08
Troubleshooting

09
Warranty

1 Important Safety Information

Explanation of symbols ▶

⚠ DANGER	Danger with a high degree of risk which results in death or severe injury (irreversible) if not heeded.
⚠ WARNING	Danger with a medium degree of risk which could result in death or severe injury (irreversible) if not heeded.
⚠ CAUTION	Danger with a low degree of risk which could result in minor injury (reversible) if not heeded.
NOTICE	Material damage, no safety note! No danger of injury.



Danger



Falling



Electrical voltage



Do not reach inside



Read the operating manual before starting



Use eye protection



Use ear protection

2 General Safety Warnings

- To work safely with this press tool, it is Imperative to read carefully the directions for use and to follow the instructions below.

01 Work area safety

a. Keep work area clean and well lit.
Cluttered or dark areas invite accidents.

b. Do not operate power tools in explosive atmospheres, such as in the presence of flammable liquids, gases or dust. Power tools create sparks which may ignite the dust or fumes.

c. Keep children and bystanders away while operating a power tool.
Distractions can cause you to lose control.

02 Electrical safety

a. Power tool plugs must match the outlet. Never modify the plug in any way. Do not use any adapter plugs with earthed (grounded) power tools. Unmodified plugs and matching outlets will reduce risk of electric shock.

b. Avoid body contact with earthed or grounded surfaces, such as pipes, radiators, ranges and refrigerators. There is an increased risk of electric shock if your body is earthed or grounded.

c. Do not expose power tools to rain or wet conditions.
Water entering a power tool will increase the risk of electric shock.
Do not abuse the cord. Never use the cord for carrying, pulling or unplugging the power tool. Keep cord away from heat, oil, sharp edges or moving parts. Damaged or entangled cords increase the risk of electric shock.

e. When operating a power tool outdoors, use an extension cord suitable for outdoor use. Use of a cord suitable for outdoor use reduces the risk of electric shock.

f. If operating a power tool in a damp location is unavoidable, use a residual current device (RCD) protected supply.
Use of an RCD reduces the risk of electric shock.

03 Personal safety

a. Stay alert, watch what you are doing and use common sense when operating a power tool. Do not use a power tool while you are tired or under the influence of drugs, alcohol or medication. A moment of inattention while operating power tools may result in serious personal injury.

b. Use personal protective equipment. Always wear eye protection. Protective equipment such as a dust mask, non-skid safety shoes, hard hat or hearing protection used for appropriate conditions will reduce personal injuries.

c. Prevent unintentional starting. Ensure the switch is in the off-position before connecting to power source and/or battery pack, picking up or carrying the tool. Carrying power tools with your finger on the switch or energising power tools that have the switch on invites accidents.

d. Remove any adjusting key or wrench before turning the power tool on. A wrench or a key left attached to a rotating part of the power tool may result in personal injury.

e. Do not overreach. Keep proper footing and balance at all times. This enables better control of the power tool in unexpected situations.

f. Dress properly. Do not wear loose clothing or jewellery. Keep your hair and clothing away from moving parts. Loose clothes, jewellery or long hair can be caught in moving parts.

g. If devices are provided for the connection of dust extraction and collection facilities, ensure these are connected and properly used. Use of dust collection can reduce dust-related hazards.

h. Do not let familiarity gained from frequent use of tools allow you to become complacent and ignore tool safety principles. A careless action can cause severe injury within a fraction of a second.

04 Tool, use and care

a. Do not force the power tool. Use the correct power tool for your application. The correct power tool will do the job better and safer at the rate for which it was designed.

b. Do not use the power tool if the switch does not turn it on and off. Any power tool that cannot be controlled with the switch is dangerous and must be repaired.

c. Disconnect the plug from the power source and/or remove the battery pack, if detachable, from the power tool before making any adjustments, changing accessories, or storing power tools. Such preventive safety measures reduce the risk of starting the power tool accidentally.

d. Store idle power tools out of the reach of children.

e.Do not allow persons unfamiliar with the power tool or these instructions to operate the power tool. Power tools are dangerous in the hands of untrained users.

f. Maintain power tools and accessories. Check for misalignment or binding of moving parts, breakage of parts and any other condition that may affect the power tool's operation. If damaged, have the power tool repaired before use. Many accidents are caused by poorly maintained power tools.

g. Keep cutting tools sharp and clean. Properly maintained cutting tools with sharp cutting edges are less likely to bind and are easier to control.

h. Use the power tool, accessories and tool bits etc. in accordance with these instructions, taking into account the working. conditions and the work to be performed. Use of the power tool for operations different from those intended could result in a hazardous situation.

I. Keep handles and grasping surfaces dry, clean and free from oil and grease. Slippery handles and grasping surfaces do not allow for safe handling and control of the tool in unexpected situations.

05 Battery tool use and care

a.Recharge only with the charger specified by the manufacturer. A charger that is suitable for one type of battery pack may create a risk of fire when used with another battery pack.

b.Use power tools only with specifically designated battery packs. Use of any other battery packs may create a risk of injury and fire.

c.When battery pack is not in use, keep it away from other metal objects,like paper clips, coins, keys, nails, screws or other small metal objects, that can make a connection from one terminal to another.Shorting the battery terminals together may cause burns or a fire.

d.Under abusive conditions, liquid may be ejected from the battery; avoid contact. If contact accidentally occurs, flush with water. If liquid contacts eyes, additionally seek medical help. Liquid ejected from the battery may cause irritation or burns.

e.Do not use a battery pack or tool that is damaged or modified. Damaged or modified batteries may exhibit unpredictable behaviour resulting in fire, explosion, or risk of injury

f.Do not expose a battery pack or tool to fire or excessive temperature. Exposure to fire or temperature above 130°C may cause explosion.

g. Follow all charging instructions and do not charge the battery pack or tool outside the temperature range specified in the instructions. Charging improperly or at temperatures outside the specified range may damage the battery and increase the risk of fire.

06 Service

a. Have your power tool serviced by a qualified repair person using only identical replacement parts. This will ensure that the safety of the power tool is maintained.

b. Never service damaged battery packs. Service of battery packs should only be performed by the manufacturer or authorized service providers.

3 Tool Specific Safety Rules

a. Maintain labels and nameplates on the tool which carry important safety information. If illegible or missing, contact the agent for replacement.

b. Do not put your fingers into the head of the tool during operating. Your fingers could be pinched very severely.

c. Make sure the head is locked firmly during operation.

d. Do not knock any parts of the tool, otherwise it could cause injury.

e. The design of the limit screw on the head is for preventing the head from dropping or popping.

f. Make sure the head is locked firmly during operation.

g. Do not use this tool for continuous use.
After 30 to 40 cycles, allow the tool to cool for 15 minutes.

h. Do not secure this tool in a vice.
This tool is designed for hand-held operation.

i. The built-in safety valve goes through strict pressure test before marketing; please do not adjust the pressure. If the pressure is not enough please return the tools back to the service centre. The tool only can be reused after checking and testing by a trained person.

j. The warnings, precautions, and instructions discussed in this instruction manual cannot cover all possible conditions and situations that may occur. It must be understood by the operator that common sense and caution are factors which cannot be built into this product, but must be maintained by the operator.

4 Understanding Your Press Tool

- The tools can be used for connecting stainless steel pipe, MLCP, PEX pipe with suitable press fittings (Bastion Press and Copper Press Fittings). The high pressure hydraulic system is powered by a Li-ion battery, actuated by AC motor.

All kits supplied with: Heavy Duty
Plastic Protective Case, 2 x 18V 2.5Ah
Batteries, Charger & Optional Jaws

Compact press tool 18V-Output 35KN
Gun suitable for:
16mm - 32mm PEX Pipe, Multi-layer Composite Pipe
15mm - 54mm Copper pipe, Stainless Steel Pipe





5 Understanding Your Press Tool



Parts No.	Description	Function
1	Jaw	Interchangeable, ensure precise pressing for pipes in different size and material
2	Rotatable Head	For flexible operation in confined place
3	Trigger Switch	Activate / Stop Motor
4	OLED Display	Indicate pressing times, Remaining battery capacity, tool temperature
5	Li-ion Battery	Supply power Rechargeable, Li-ion (18V, 2.5Ah)
6	Locking Bolt	Fix Pressing Jaw into position
7	Pump body	Control flow direction of hydraulic oil Automatically return piston when complete pressing
8	Retract Button	Manually release pressure, return piston in case of error or adjustment during operation
9	Tool Body	Compact design for easy handling by one hand

Function description ▶



Auto reset - Releases the pressure automatically, retracts the piston to the starting position when the max output is reached.



Manual reset-Can retract the piston to the starting position in case of error or adjustment during operation



OLED display-Dot matrix OLED display which shows pressing times, remaining battery capacity, tool temperature and also maintenance reminding, fault codes.

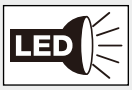

LED white light automatically turn on when press switch help illuminate dark place for easy working



The head can be smoothly turned (Max. 330^0) for easy accessing to pipe and fitting in confined working place



Quick stop-When release switch or reach complete pressing immediately stop motor, interrupt advancement of pistion ensure safe operation and save battery energy.



The overall structure of the tool is compact. It is ergonomically designed with stick type body and good balance for easy handling by one hand.

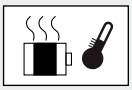

A temperature sensor alerts when the temperature exceed 65°C. A fault singal sounds, stop operation, allow the tool to cool for better performance and long tool life.



High-performance lithium-ion battery -- providing a stronger power source, no discharge memory effect, ultra-low power consumption. The standby design can guarantee the storage time of up to 6 months.

Display Function and Meaning ▸

- **Low battery protection function**

  In working mode or aging mode, when the battery is detected to be too low, it will enter the low battery protection state, and the motor will be turned off to ensure the safety of the battery.
  Display alarm content: [LOW SOC PROT].

- **Over-current protection alarm function**

  In working mode or aging mode, when the overload of the machine is detected, it will enter the overcurrent protection state, and the motor will be turned off to ensure the safety of the equipment.
  Display alarm content: [OVER LOAD PROT].

- **Over-temperature protection alarm function**

  In working mode or aging mode, when the temperature of the machine is detected to be too high, it will enter the temperature protection state, and the motor will be turned off to ensure the safety of the equipment.
  Display screen alarm content: [OVER TEMP PROT].

- **LCD display**

  When the control panel is plugged into the battery and turned on, the display screen displays the model and version number of the control panel, and then enters the working mode.
  In working mode or aging mode, the display screen displays working times, power, temperature and alarm information.

- **Overvoltage protection alarm function**

  When the input voltage of the control panel exceeds 24V, it will enter the overvoltage protection state, and the motor drive will be turned off to ensure the safety of the equipment and the control panel.
  Display alarm content: [OVER VOLT PROT].

- **Data clearing**

  When the control panel is powered on, insert the jumper cap at position J7 or use tweezers for continuous shot connection at position J6 until the buzzer gives a short call, indicating that the working times have been successfully cleared, and then working times will be counted again.

* Available on Bastion Powered Press Tools only

6 Operating Instructions

Read the entire safety information section at the beginning of this manual including all text under subheadings therein before using this product.

Use this tool for the manufacture's intended purpose only.
Use other than that which is described in this manual could result injury or property damage.

⚠ WARNING



1) Do not hammer or impact any part of the tool. Before operation, check the tool for any damage, aging, missing parts, misalignment or component jamming and any other unfavourable factors that may endanger safety and normal operation.
2) During the crimping process, the jaw fixing pin must be fully inserted into the clamp head to lock and prevent the jaw fixing pin from slipping out.
3) When pressing, the O-ring ring groove of the pipe fitting must be placed in the ring groove of the jaws. Otherwise, the O-ring could easily be crushed and water leakage could occur.
4) The limit screw on the clamp head prevents the clamp head from falling off or popping out. Do not attempt to remove it.
5) Remove any grease or dust, from the handle and control components, to prevent the tool from slipping during use.
6) The built-in safety valve undergoes strict pressure detection before leaving the factory; the end user must not adjust it. If you are experiencing under-pressure issues, please take the tool to a qualified service technician for pressure testing and service.

During the extension of the tool piston, do not put any part of the human body such as your fingers into the working jaws.

01 Charging

Follow the steps below to remove the battery and charge it using the battery charger supplied. Ensure the room temperature is between 10°C - 40°C. The charging time is approximately 80mins.

For detailed charging information, please refer the charger manual.

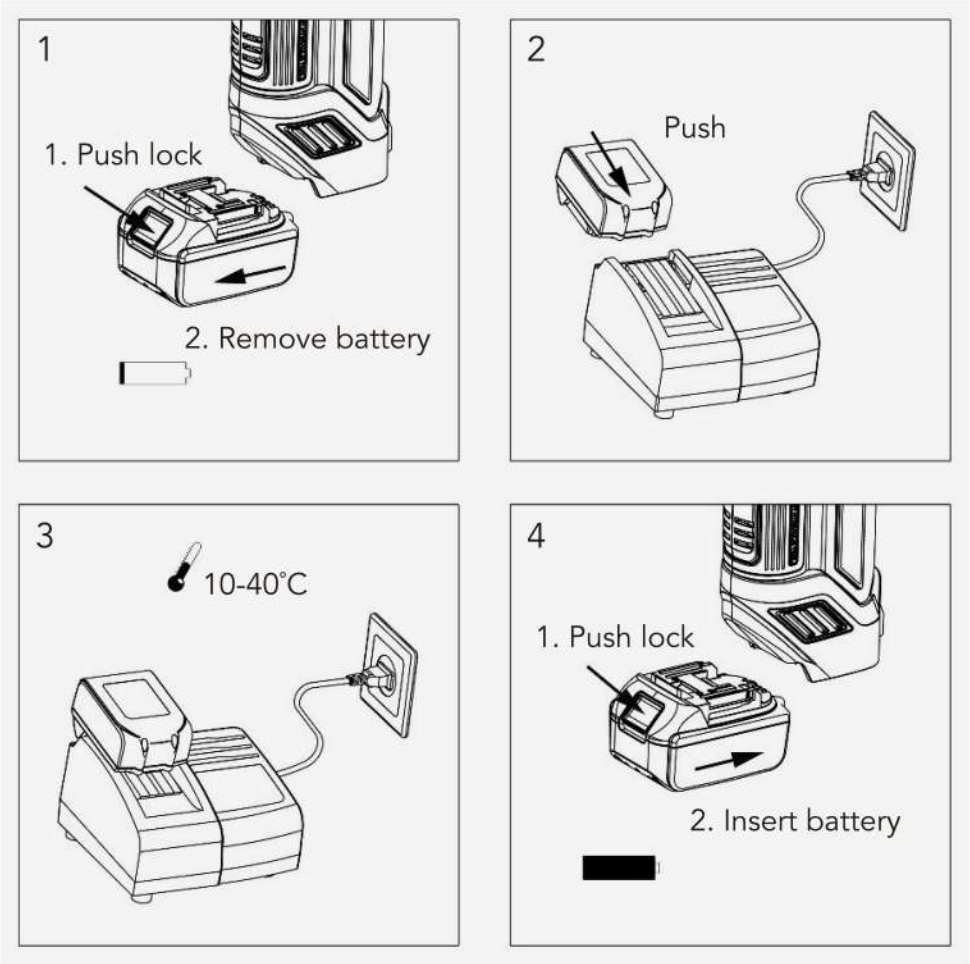

02 Battery Care Information

⚠ CAUTION

1) The battery can be cycled hundreds of times. A drop in battery capacity is expected after a significant amount of cycles.
When this occurs, please contact your retailer regarding sourcing replacement battery.
2) As with all Li-ion batteries, running them down fully and leaving them at a low state of charge can damage the battery.It is recommended to charge the battery once the initial low battery warning is displayed on the device.
3) Do not connect the two poles of the battery with a wire, which is likely to cause electric arcing or even combustion.
4) Do not use a damaged battery. This will increase the risk of abnormal operation or electric shock.
5) Under no circumstances should batteries be burned as they may explode.
6) When charging the battery, do not cover the charger with any object, so that the charger cannot dissipate heat. This could result in the charger overheating.
7) Disconnect the charger when not in use. It will reduce the risk of injury to children and untrained personnel.
8) Do not use the charger in a humid environment, and do not expose to rain and snow, as it will increase the risk of electric shock.
9) Do not disassemble the battery and charger. If the battery is defective, please return the battery to the retailer for a replacement.

03 Using the Tool

3.1 Changing the jaws and completing pressing operations

1) Turn locking bolt counterclockwisely until yellow point on knob reach release position locking bolt will automatically move out with the help of spring. Insert jaw into tool head. push back locking bolt, at the same time, turn locking bolt counterclockwisely until yellow point move to fixing position (yellow point on knob align with yellow point on head)
2) Manually open the jaws and move them into position around the pipe fitting to be pressed
3) Press and hold trigger switch for about 1-2 seconds, then release it, the piston will advance to close jaw around fitting and automatically return back when reach complete pressing. (if need to stop tool during pressing, press switch, it will help stop motor. Make necessary checking or adjustment, then press switch and hold it for 1-2 seconds again to continue pressing or press manual retract button to release pressure, return piston)
4) Manually open the jaws to remove the tool from the pressed fitting.
5) After operation, before storage, carefully clean tool and make necessary lubrication for Jaws, pin, locking bolt, ensure better performance and longer working life.

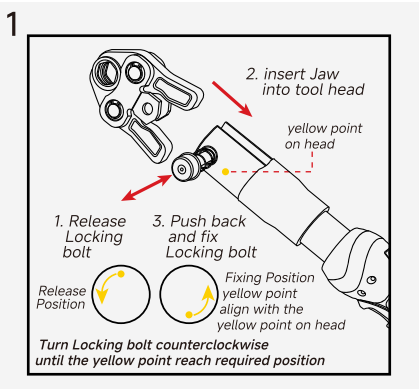

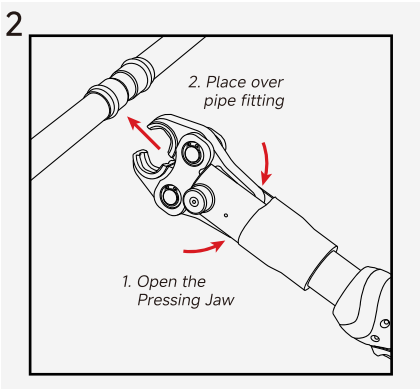

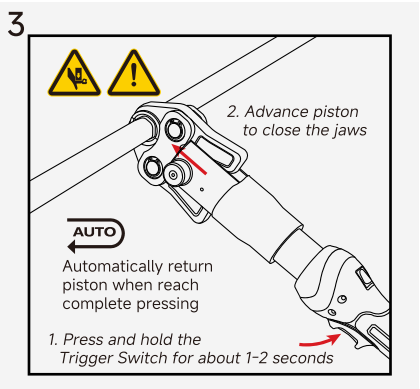

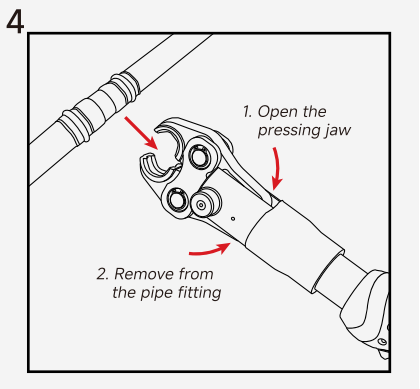

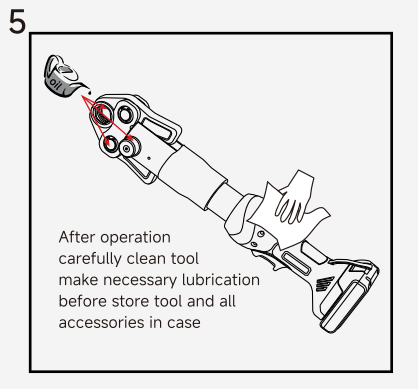

3.2 Complete pressing with Ring Type Jaw

1) Turn locking bolt counterclockwisely until yellow point on knob reach release position locking bolt will automatically move out with the help of spring. Insert adapter into tool head. push back locking bolt, at the same time, turn locking bolt counterclockwisely until yellow point move to fixing position (yellow point on knob align with yellow point on head)
2) Manually open ring type jaw, then grip pipe fitting requiring pressing.
3) Open Adapter, adjust position until 2 tips of adapter move into 2 grooves of ring type jaw release adapter, make it grip ring type jaw.
4) Press and hold the trigger switch for about 1-2 seconds, then release it, the piston will advance to close jaw around fitting and automatically return back when reach complete pressing. (if need to stop tool during pressing, press switch, it will help stop motor. Make necessary checking or adjustment, then press switch and hold it for 1-2 seconds again to continue pressing or press manual retract button to release pressure, return piston)
5) Manually open adapter and ring tye jaw to remove pressed pipe fitting.
6) After operation, before storage, carefully clean tool and make necessary lubrication for Jaws, pin, locking bolt, ensure better performance and longer work ing life.

1

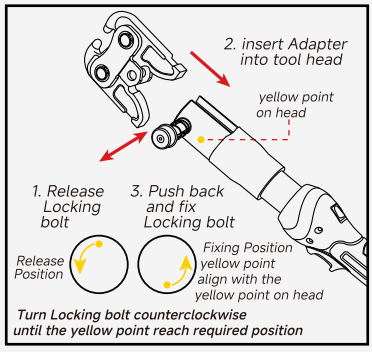

2

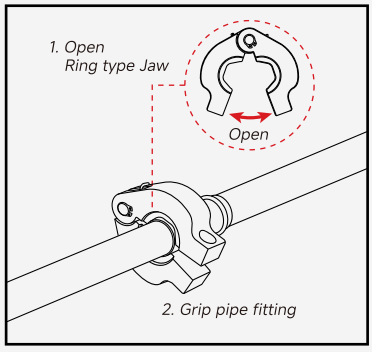

3

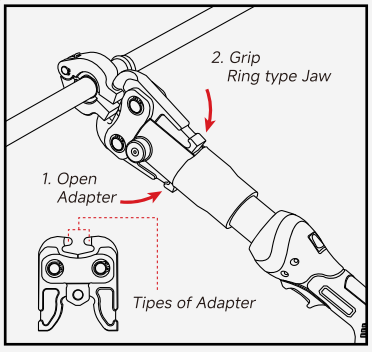

4

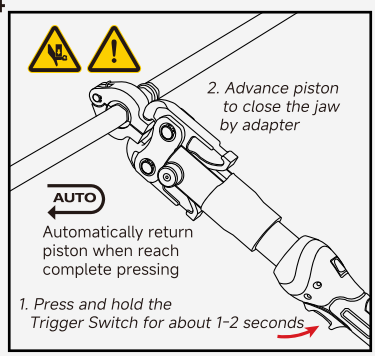

5

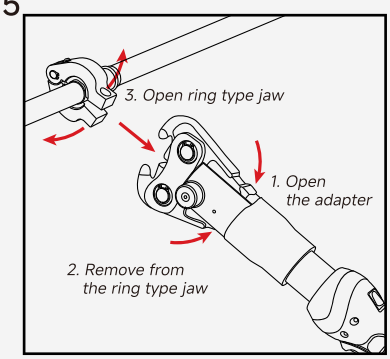

6

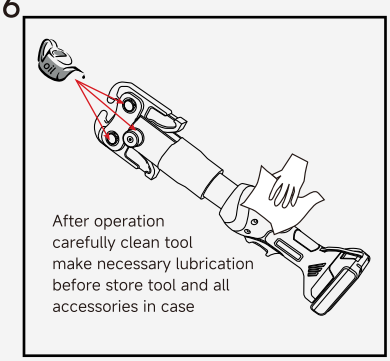

3.3 OLED display interface description



05 Pressing Jaws

5.1 Jaw Safety Information

⚠ CAUTION

1) Pressing tool, pressing jaws, adapter or ring jaws are only for the corresponding piping system and fittings. Use of alternative jaws or modified standard accessories damage tools and accessories, and could result in personal injury.

NOTICE

1) The jaw is a consumable part. After significant use, the material will become fatigued and cracks may occur. A heavily worn jaw is prone to breakage, especially if it is used improperly such as over-sized fittings, skewed press, etc.

2) Check the jaw for any breakage, cracks, component jams or any other unfavourable factors that may compromise safety and normal operation. Perform this check either periodically or before each use. If you find any problems, please stop using the tool immediately, and return them to the retailer for professional repair and servicing.

1) If any of the items below are witnessed while using the tool, please stop using it and consult your retailer for repair or service.

a. the jaw arm is cracked and deformed

b. the jaw is cracked, scratched, sunken or severely worn

c. the die is cracked or severely worn

5) Do not put any part of the human body, such as your fingers, into the jaw ring during use

⚠ CAUTION

Improper operation can lead to leaks at the press fitting

1) Please ensure that the press fitting specification are the same as below
2) It should be confirmed that the jaws has been completely closed after the pressing is completed.
3) When pressing, make that the jaw along with the pressing tool is properly positioned on the flange of the fitting
4) If the jaw can not be completely closed when pressed, contact your retailer to arrange service and repair.
5) If the jaw connection is incorrectly squeezed, replace with a new jaw and do not continue to use it.
6) If there is a burr on the pipe joint after pressing, contact your retailer to arrange inspection service and repair.

5.2 Standard Jaws Types



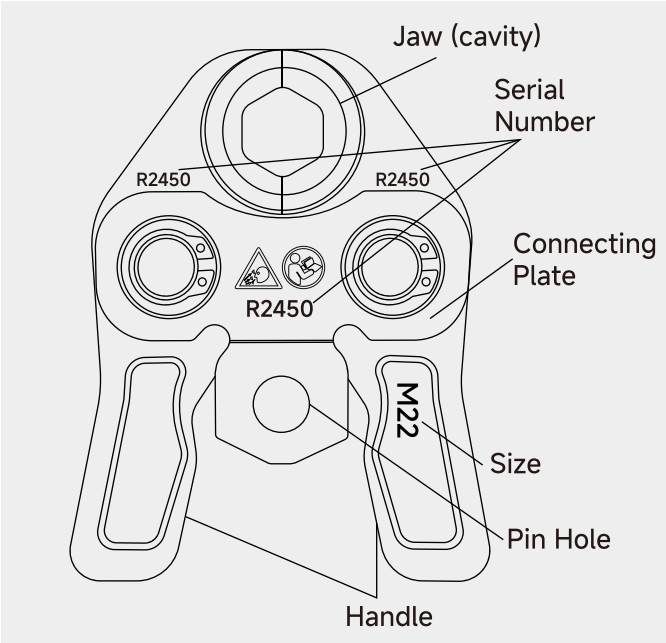

5.3 Jaw Cleaning and Maintenance

1) The accumulated residue in the pressing jaws must be periodically cleaned. Cleaning the residue can be done with a scouring pad or a steel wool. Do not use any severe abrasives like such as sandpaper or files which will accelerate the wear on the edge of the jaw.

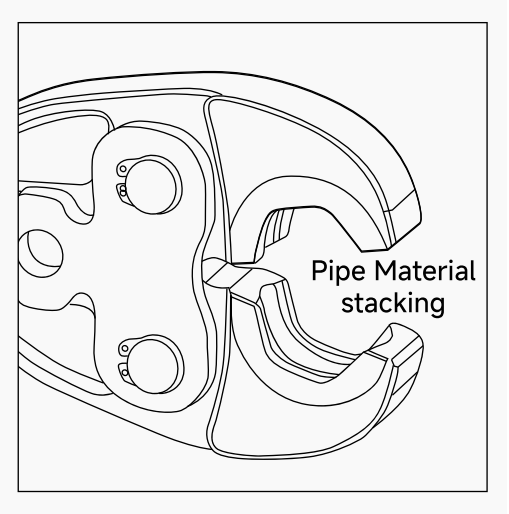

2) After each pressing cycle completed, remove the impurities and dust on the surface of the jaws, especially within the gap at the bottom of the jaws. Rub lubricant on the surface of the jaw, especially the pin and jaws.

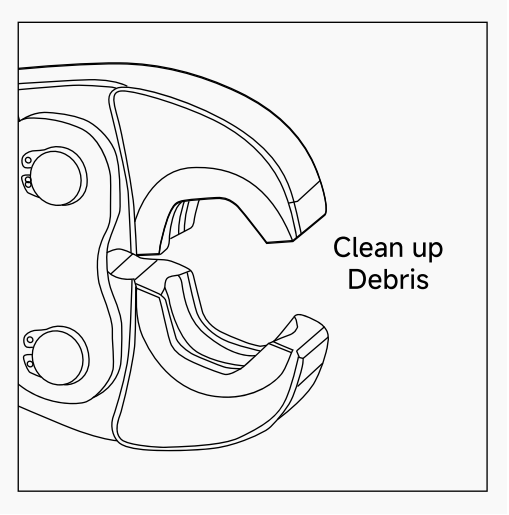

3) Do not hammer or impact the jaws in any way.

4) Check the jaw return spring before each use. Normally, the jaw can be easily opened and closed by applying a single finger.

5) It is recommended to check the wear of the jaw once a year.

7 Maintenance and Servicing

⚠ WARNING

Damaged equipment may cause serious personal injury. Do not use damaged equipment. If abnormal noise or vibration occurs, have the problem corrected before further use.

1. Before each use, inspect the general condition of the tool. Check for loose screws, misalignment or binding of moving parts, cracked or broken parts, or any other condition that may affect its safe operation.
2. After using, clean external surfaces of the tool with a clean,damp cloth. Smear rust preventing oil on the metal surfaces of the tool and the jaws to prevent rust. Store the tool in a dry environment.
3. Tool servicing should only be done by a qualified Service Technician.
4. In order to prolong the life of the tool please change the oil once per year. Ensure the oil is filtered by 120 mesh net or over 30μm strainer. Avoid the dust entering into the oil cup when changing the oil.
5. After a long time using, the sealing kits will be damaged. If there is leakage please contact the manufacturer and/or the distributor to arrange service and calibration.
6. If the tool not used for a long time, please make sure the piston remains on its starting position. Take out the battery and store it in the box with the tool in a dry enviornment.
7. Please return the pressing tool for maintenance and calibration once every 12 months or every 10000 cycles of use (which ever accurs first). Ensure that the product is maintained in accordance with specified requirements when seeking warranty coverage.

8 Troubleshooting

FAULT	ANALYSIS	SOLUTION
A. Tool is inoperative	1. The battery has run out 2. Dirt, contaminants, etc in ram area of tool 3. Tool components worn or damaged	1. Charge the battery 2. Clean hydraulic system 3. Contact Bastion Service Centre to arrange service and calibration
B. No power during operation or rated power not being provided	1. No oil 2. Dirt, contaminants inside of oil reservoir. 3. Inner leakage	1-3. Contact Bastion Service Centre to arrange service and calibration
C. Oil leakage on the head or plunger	1. Worn sealing kit	1. Contact Bastion Service Centre to arrange service and calibration
D. Motor running but no power output	1. No oil in the oil reservoir 2. Air into the hydraulic system 3. Cold oil	1-2. Contact Bastion Service Centre to arrange service and calibration 3. Use the tool between 10°C-40 °C

9 Warranty

Bastion provides the full statutory warranty of 24 months for its press tools. The warranty period commences on the date of delivery, which must be proven by means of the sales documentation. The warranty will only remain valid if the press tool has been serviced and calibrated according to the service and calibration schedule.

Within the warranty period, the warranty covers the repair of any damage or malfunction of press tools that is attributable to material or production faults. The warranty covers the press tool itself and does not cover accessories such as batteries, chargers and press jaws.

The following damages are not covered by the warranty:

- Damage caused by improper use or inadequate servicing.
- Damage caused by the use of products not approved by Bastion for use with its tools.
- Damage caused by pressing unsuitable pipes or fittings.

Warranty work and parts provided in response to warranty claims do not have to be paid for. However, all shipping costs shall be borne by the user. Claims can only be accepted if the device is delivered to the Bastion Service Centre in an assembled state. Repair or replacement of the device under warranty does not result in an extension of the warranty period. Repair or replacement can only be performed using as-new components, the function of which corresponds to that of the old components. All parts that are faulty and consequently replaced are the property of the manufacturer.

BASTION
INDUSTRIES

Instruction

Superior Plumbing Products