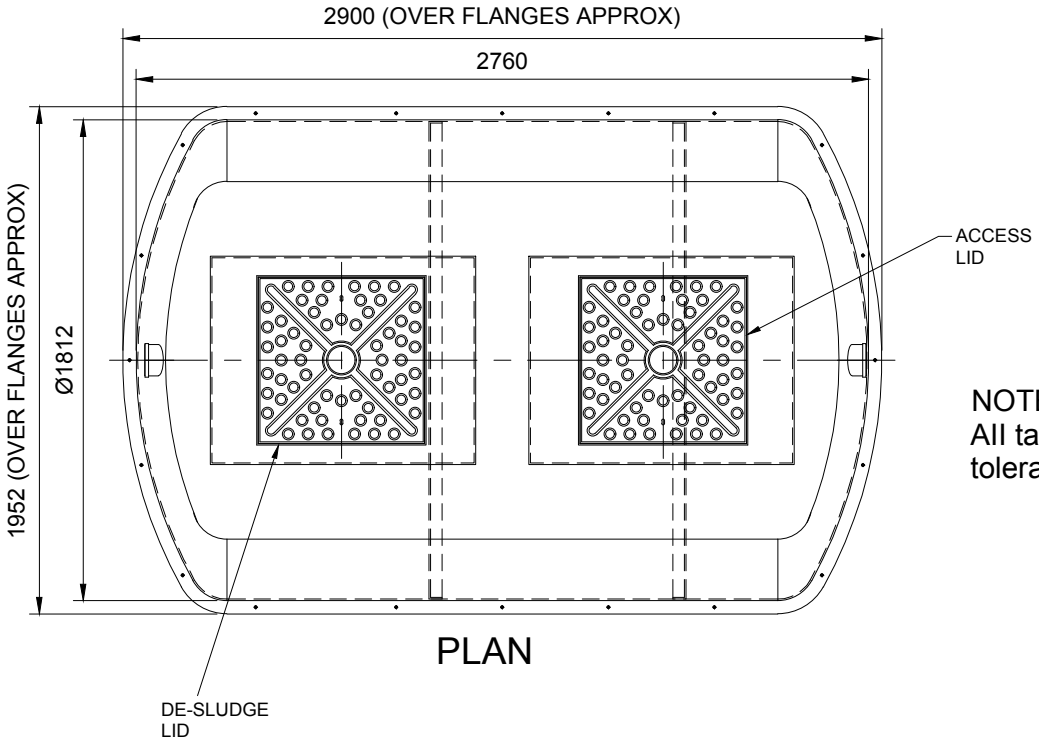


PLAN

NOTE:
All tanks are subject to a 2.5% tolerance on all dimensions.

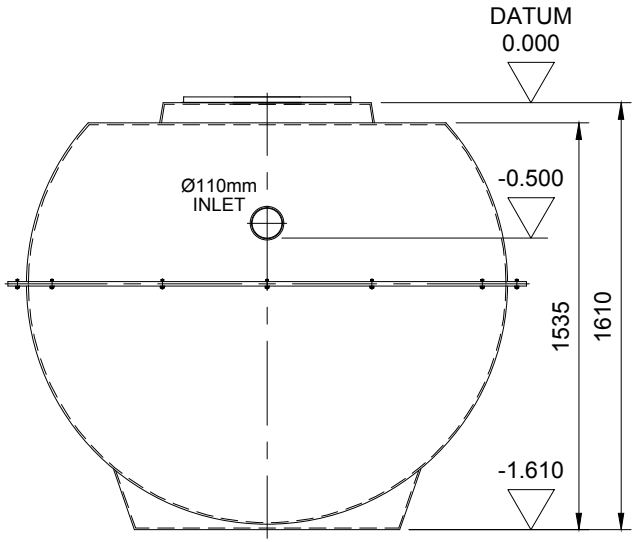


VIEW ON INLET

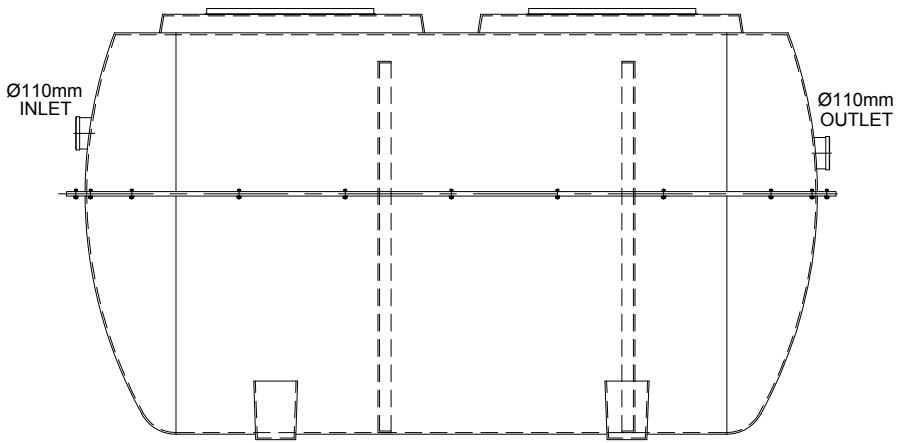


SIDE ELEVATION

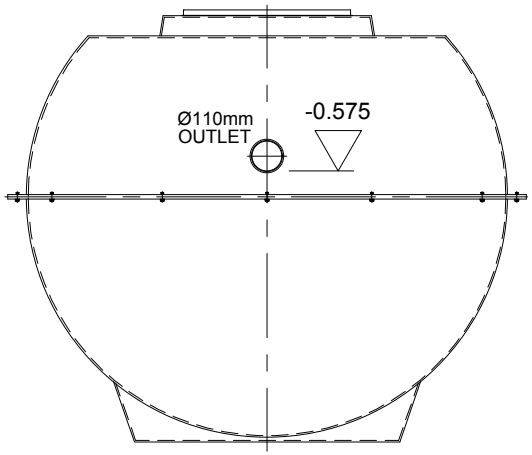


VIEW ON OUTLET

| REV | DESCRIPTION | DATE | SIG |
|---|---|---|---|
| A | For Approval | 20.07.14 | P.L. |

THIS DRAWING IS THE PROPERTY OF MARSH INDUSTRIES LTD. AND MUST NOT BE REPRODUCED OR CIRCULATED FOR ANY PURPOSE WHATSOEVER WITHOUT FIRST OBTAINING WRITTEN CONSENT FROM THE MARSH INDUSTRIES LTD.

ORIG. | CHKD | APP'D
SCALE N.T.S. | DATE 20.07.14
3 RD ANGLE PROJECTION | DO NOT SCALE IF IN DOUBT ASK

CLIENT

TITLE
UNI:ENSIGN
SHALLOW TANK RANGE
10 (TEN PERSONS)
EN12566-3:2005+A1:2009

MARSH
MARSH INDUSTRIES LTD.
UNITS 9-13 ADDINGTON PARK IND. EST., LITTLE ADDINGTON, KETTERING, NORTHAMPTONSHIRE, NN14 4AS.

DRG. ES 10 | REV A