| REVISIONS | | | | | |
|---|---|---|---|---|---|
| REV | ECO | DATE | REVISED | CHECKED | APPROVED |
| A | | 10/4/2010 | | | |

# SOLATUBE 290 DS (14 IN / 350 MM) SELF-FLASHING HARD CEILING

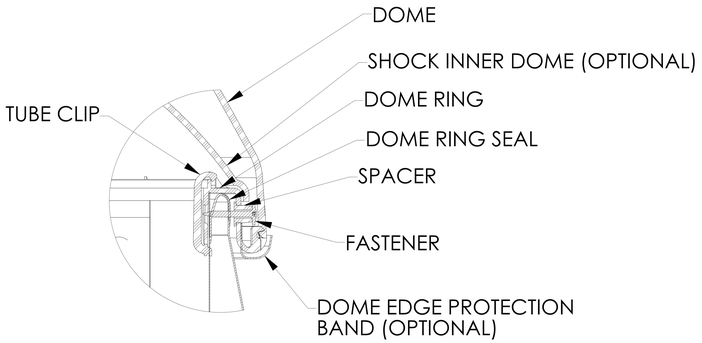


**DETAIL A**
**SCALE 3 : 1**

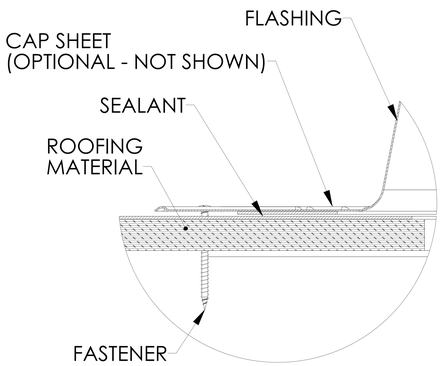


**DETAIL B**
**SCALE 3 : 1**

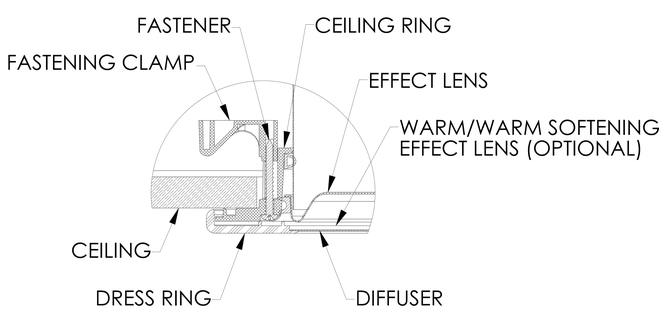


**DETAIL C**
**SCALE 3 : 1**

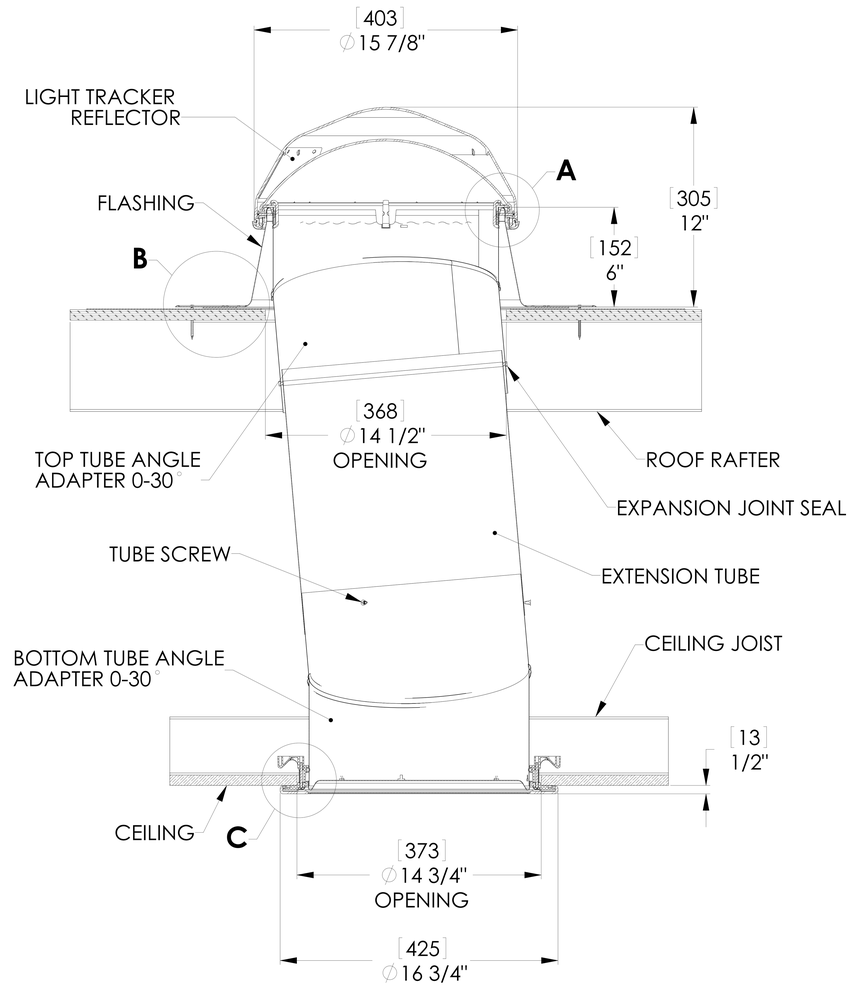


**FULL SECTION**
**SCALE 1:1**

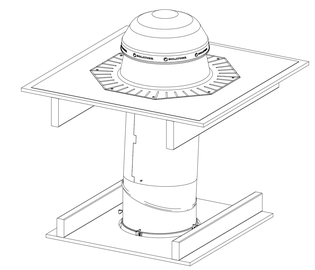

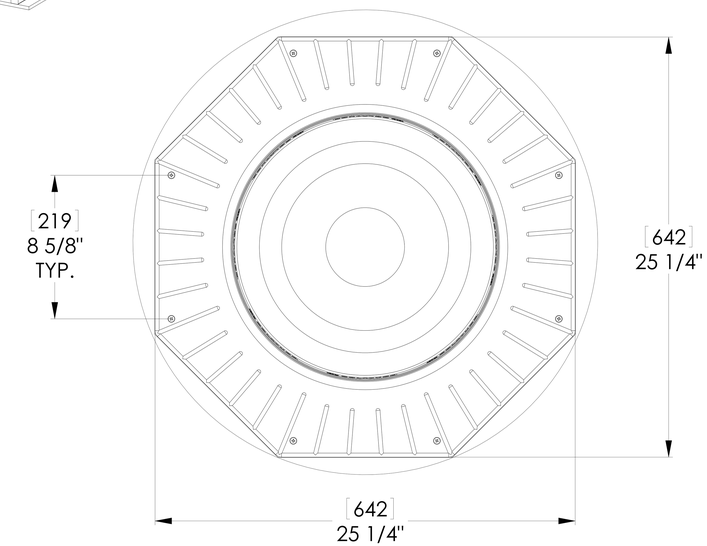


**TOP VIEW**

NOTES:

1. STRUCTURAL ELEMENTS (PLYWOOD, RAFTERS, DRYWALL ETC. BY OTHERS & SHOWN FOR REFERENCE ONLY.
2. ALL TUBE JOINTS & SEAMS TAPED WITH 2" FOIL TAPE (NOT SHOWN).
3. DIMENSIONS IN BRACKETS ARE METRIC UNLESS OTHERWISE SPECIFIED.
4. 6" MIN CLEARANCE SHOULD BE MAINTAINED FROM ALL SOLATUBE COMPONENTS AND OTHER PLENUM COMPONENTS.

UNLESS OTHERWISE SPECIFIED:
DIMENSION TOLERANCE
FRACTION : ±1/4"
INCH .X : .1 MILLIMETER [.X] : 2.5

MATERIAL
--
--

FINISH
--

DO NOT SCALE DRAWING

SOLATUBE INTERNATIONAL, INC.
COPYRIGHT 2010
WWW.SOLATUBE.COM

DRAWN BY STEVENS — DATE 10/4/10
CHECKED BY -- — DATE --
APPROVED BY -- — DATE --

SOLATUBE
2210 OAK RIDGE WAY
VISTA, CALIFORNIA 92081-8341
PH (760) 597-4400

TITLE: SOLATUBE 290 DS SELF-FLASHING HARD CEILING

SIZE | DWG. NO. WEB-290DS-SF6-HC | REV A

SCALE: 1:1 | SHEET 1 OF 1