OPERATIONS & MAINTENANCE MANUAL

M-Tray®

Sedum / sedum & wildflower Modular Green Roof System

Date 01/06/2023

PRODUCT DESCRIPTION

M-Tray® is an instant living roof in a box. All the elements of a traditional roll-out system are contained within its 500mm x 500mm x 100mm cassettes. These easy-to-carry trays which click together to form a seamless green roof, creating an established green roof in a fraction of the time of traditional roll-out.
The fully established sedum or sedum & wildflower modules are grown from seed in UK nurseries and packed onto pallets for delivery to site.

M-Tray® can be lifted at any time in the future, should the roof deck need inspection or repair, for example.

M-Tray® has a fire classification of B ROOF(t4) EX AP and complies the new Green Roof Organisation Code 2021 and BS 8616:2019.

MATERIALS

300gsm Recycled Polyester Geotextile
M-Tray® SEDUM / Wildflower Green Roof Module 500x500x100mm
Optional aluminium edging bar
Optional rounded washed Riverstones
Optional irrigation system

For Full Product Description M-Tray® please see Product Brochure within Appendix A

PHYSICAL AND CHEMICAL PROPERTIES

Please see M-Tray® Bill of Materials in Appendix A.

MEASUREMENTS

Please see M-Tray® CAD Drawings in Appendix A.

PRODUCT LITERATURE

Product Brochure included in Appendix A

PRODUCT INSTALLATION

Deliveries

Delivery of materials will made by curtain sided haulage vehicle with tail lift for kerb side delivery. Requirement of FORS or other special delivery terms should be requested at time of order.
It is the responsibility of the Client / installers to move pallets from kerb side to roof and ensure that adequate Health & Safety procedures are followed when moving and installing M-Tray® modules.

Installation

Please see Wallbarn Installation Guide in Appendix A
and https://www.wallbarn.com/how-to/green-roofs/ .
Installation should be carried out in accordance with GRO guidelines.

Installers must unload modules by hand from pallets as soon as possible to avoid damage to plants.
The modules will weigh no more than 25kg each and can be moved by hand. Do not tip or invert modules. They should be carried “green” side up.

It is essential that the M-Tray® modules are given access to air and watered as soon as possible. Water well after installation and as often as possible for up to eight weeks afterwards, particularly in hot or dry weather.

Risk Assessment for Installation

A Qualitative Risk Assessment is a formal and systematic risk analysis approach in deciding whether a risk is low, medium or high. This form of risk rating is used to determine which hazard should take priority over another in terms of deciding what to do and when.

Risk Before Controls						Controls	After Control Measures		
Hazard	Consequences	Persons Affected	Severity	Likelihood	Total Risk	Additional Measures	Severity	Likelihood	Total Risk
Manual Handling	Limb Injury Musculoskeletal Disorders	operative	4	4	16	Operatives have received manual handling training in accordance with current regulation.	3	1	3
Falling Materials	Impact Death	Operator, other trades, General Public	5	2	10	Signage (Overhead working), barriers to close pavement at either end of bus shelter. Bus stop to be suspended during works	1	2	2
Falls from Height	Death	operator	5	2	10	Man Safe fall arrest system to be used when on Bus Shelter roof, Tool box talks, daily inspections, crew awareness	4	1	4
Unloading Vehicles	Collision, impact and falls	Operator, other trades, General Public	4	4	16	Crew Briefing, allocated unloading area, no access to vehicle bed, supervised unloading, barriers for protection of other working colleagues and general public	4	1	4
Cutting	Loss of Limbs	operator	4	2	8	Safe areas for cutting, correct equipment and suitable PPE	4	1	4

Risk Assessment Matrix

Risk						
Severity	5	5	10	15	20	25
	4	4	8	12	16	20
	3	3	6	9	12	15
	2	2	4	6	8	10
	1	1	2	3	4	5
		1	2	3	4	5
		Likelihood				

No hazardous materials are used within the process of completing this project.

HAZARDS IDENTIFICATION

Hazard: Site set up

Risk rating (no control measures): Medium
Risk rating (residual risk): Low
Persons affected Operatives/Site Workers -- Public

Existing control measures

The work site should be surveyed prior to the works commencing for health, safety or environmental hazards on site.
Extent of works should be discussed with existing site occupants / client. Clear boundaries lines should be agreed prior to any works commencing.
Lifting equipment and access to roof space should be arranged before arrival of materials.
Site emergency arrangements should be implemented prior to the start of activities. Appropriate welfare provisions should be provided on site.

Hazard: Dust and fumes

Risk rating (no control measures): Medium
Risk rating (residual risk): Low
Persons affected Operatives/Site Workers

Existing control measures

Suitable PPE / to be issued to all site operatives.

Hazard: Materials delivery

Risk rating (no control measures): Medium
Risk rating (residual risk): Low
Persons affected Operatives/Site Workers -- Public

Existing control measures

Planning and control of deliveries - timing, quantities, size and weight will be established and communicated.
Adequate, suitable and sufficient personal protective equipment should be provided and the wearing of it enforced.
All waste and refuse should be collected at specified collection points or skips.

Hazard: Manual handling

Risk rating (no control measures): High
Risk rating (residual risk): Low
Persons affected Operatives/Site Workers

Existing control measures

When necessary and reasonably practicable, loads to be manually handled can be made smaller or lighter.
Appropriate, suitable and sufficient personal protective equipment will be issued to operatives as and where it has been identified as necessary.
All items in excess of 25kg should be lifted and carried via team lifting where it is not feasible to use mechanical means.

Hazard: General housekeeping

Risk rating (no control measures): Medium
Risk rating (residual risk): Low
Persons affected Operatives/Site Workers -- Public

All waste materials should be cleared from work areas up and bagged.

MAINTENANCE DETAILS

Please refer to Wallbarn Maintenance Guide in Appendix A
and https://www.wallbarn.com/how-to/green-roofs/ .

FIRST-AID MEASURES

In event of cuts and damage from dropped products, wash out wound with plenty of clean water. Seek medical attention as soon as possible.

In event of bruising or impact damage from dropped products, Seek medical attention as soon as possible.

FIRE-FIGHTING MEASURES

M-Tray® is classified as B ROOF (t4). Therefore, it does not constitute a fire hazard. If a fire breaks out on or near the roof space call the Police and the Fire Brigade immediately. Evacuate the building immediately.

ACCIDENTAL RELEASE MEASURES

Every part of M-Tray® can be recycled. Please contact Wallbarn for advice. As supplied, the products are not classified as hazardous.

HANDLING AND STORAGE

When handling product, due regard should be paid to the risks outlined in the Manual Handling Operations Regulations 1992, particularly the weight of each module. Appropriate PPE should be used. The modules should be unpacked from the pallets and the sedum / sedum & wildflower be given access to light and adequate water. The modules should be stored in a safe and stable manner.

PERSONAL PROTECTIVE EQUIPMENT

Suitable protective equipment and clothing are required that are appropriate to the potential hazards encountered to reduce the chances of physical injury while using this product.

E.G.

Safety footwear (BS EN345)

Hard Hats with chin straps (BS EN397)

Task suitable gloves (BS EN388)

Eye protection and ear protection where required

Local Exhaust Ventilation, Goggles and a dust mask to the relevant European standard (EN149) may be required if the modules are handled in a way that liberates dust.

ECOLOGICAL INFORMATION

Made from >90% recycled materials.

Subsequent to manufacture, this is a stable product with no known adverse environmental effects.

DISPOSAL CONSIDERATIONS

Recycling of all materials is preferable to disposal.

Every element and ingredient of M-Tray® can be recycled. Please contact Wallbarn before any disposal activities are undertaken. If the product is to be disposed of, disposal should be made at an approved solid waste disposal site. Disposal of the product should be in accordance with any local or national regulations.

Care should be taken not to allow any pollutants to contaminate the local environment.

Any Hazardous waste should be separated and disposed of in accordance with the Hazardous Waste Regulations.

Wallbarn Ltd : Unit 16 Capital Business Centre : 22 Carlton Road
South Croydon : CR2 0BS : www.wallbarn.com

APPENDIX A:

The following table summarizes the documents referenced in this document.

Document Name	Location
GREEN ROOF BROCHURE	https://www.wallbarn.com/green-roofs/m-tray/
Wallbarn Ltd Terms & Conditions	https://www.wallbarn.com/terms-conditions-of-supply/
Installation Guide	https://www.youtube.com/watch?v=eMrqchRtr7E
	https://www.youtube.com/watch?v=AcD0sX-FjV4
Maintenance Guide	Attached
Irrigation System installation guide	https://www.youtube.com/watch?v=7D0fOdgFuxo
CAD Drawings	Attached
Substrate Specification	Attached
Polypropylene Tray Specification	Attached

Wallbarn

GREEN ROOFS

Featuring our unique M-Tray® modular system

wallbarn.com

BENEFITS OF GREEN ROOFS

Green roofs bring nature back into urban spaces. They improve air quality, aesthetics, help prevent flash flooding and encourage wildflife while mitigating the impact of humidity on the climate.

Green roofs are very adaptable and can be designed for large or small areas on many different structural decks.

IMPROVING THE ENVIRONMENT

- Aesthetically pleasing
- Provides valuable habitat
- Attracts insects, invertebrates and birdlife
- Absorbs CO2, pollution and dust particles
- Helps combat the Urban Heat Island Effect
- Part of SUDs performance

PROTECTING THE WATERPROOFING MEMBRANE

- Extends roof membrane's life by protecting it from pests
- Protects roof membrane from UV and heat degradation
- Provides an attractive alternative to pebbles or concrete slabs for holding down insulation boards or loose laid waterproof systems

RAINWATER ATTENUATION

- Absorbs rainwater into the substrate
- Reduced run-off by up to 50%
- Delays discharge into outlets by up to an hour

ENHANCING INSULATION

- Sound: reduces transmission of noise and vibration
- Thermal: absorbs solar heat and provides cooling

OPTIMISING THE DEVELOPMENT FOOTPRINT

- Softens the building envelope
- Provides additional green space and helps BREEAM ratings
- Brings a feeling of open space to high density environments which can help with planning permission
- Improves financial yield of building

M-TRAY®

MODULAR GREEN ROOF

Wallbarn has developed a modular system which makes installing a green roof incredibly easy with far less disruption to both plants, structure and inhabitants than other methods. The modules simply click together to create a seamless, instant green roof.

All the elements required for a successful green roof have been designed into the M-Tray® modules at our UK nursery to ensure strong, healthy long- lasting vegetation. The trays are grown on site for at least 6 months and all will have been through at least one Spring growing season; so the plants are well established, healthy and strong, and fully integrated into the substrate (unlike sedum blankets, which are not).

CONVENIENCE

Mess and disruption can be a problem with roll- out systems. Bags of aggregate-based substrate can spill easily and being so granular, can damage waterproofing membranes. Sedum blankets are also supplied rolled up so the plants get damaged during the transport and installation process. Our M-Tray® modules overcome all of these issues.

ACCESSIBILITY

As each module is 500 x 500mm, one M-Tray® can be carried by one operative. For areas which are very difficult to access such as single storey extensions, domestic projects and other completed structures where roll-out is simply not possible. M-Tray® can be handballed into even the most awkward areas, even carried through a window if necessary. They are the perfect retro-fit product.

SPEED

It is estimated that our M-Tray® can be installed at least twice as quickly as roll-out systems. A team of contractors can easily install approx. 400 square metres in a day.

INSTANT RESULTS

It is also an instant green roof. Since the plants are less shocked by the installation process, as soon as the trays are connected together the whole area is filled with well established plants. They will continue to mature straight away, forming a seamless layer of vegetation much faster.

FUTURE-PROOF YOUR GREEN ROOF

Access to the roof is futureproofed. If there are problems with the deck beneath or inspection is required, one M-Tray® or section can easily be lifted out without disruption to the whole roof.

‘M-TRAY® - THE PERFECT INGREDIENTS

Wallbarn has designed, developed and produced the M-Tray® module from scratch, creating a product that combines optimum nutrient level and drainage whilst taking into account the practical constraints of construction.

The M-Tray® module is manufactured in England.

MODULE

The current module design is the fourth generation of our green roof system and has the following benefits:

- Each module measures 500 x 500 x 100mm
  - 4 x units make up exactly 1 sqm making estimating far easier
  - 100mm buildup gives sedum more room to develop healthy root growth
- Carefully positioned drainage holes
  - Allow sedum plants to absorb more rainfall, increasing attenuation and delaying discharge into outlets
  - Stronger plant growth at the edges creates a more seamless layer of vegetation when the modules are connected
- Smooth edges
  - The underside has a smooth surface to prevent abrasion with the sub-deck
  - Inset ridges at the discharge points maintain free drainage without clogging
  - The corners of the modules are rounded and smooth, so no sharp edges are present
  - Hand grips on the underside are positioned to enable installers to carry each module easily
- Tight connection
  - The connecting brackets ensure minimum gap between each module

SUBSTRATE

An engineered growing medium is specially mixed by Wallbarn. It is designed to provide a lightweight, free draining mass for green roof plants to root into and grow healthily in the long-term.

Green roof substrates should contain the following criteria:

- Lightweight and free draining;
- Varied particle sizes with resistance to compaction
- Low organic content with balance of nutrients for sustainable & healthy plants long term
- Avoidance of weeds, impurities and contaminants and chemically stable;
- No peat in the mix;
- Adherence to green roof codes, standards and regulations

Wallbarn designed and developed its own substrate mix using leading independent soil specialists to create a bespoke recipe which complies to Building Regulations Approved Document B, BS 8616:2019 and the GRO Code.

We use a number of ingredients, including:

- Lightweight, non-organic, mineral aggregate to provide bulk, good drainage and improved rooting conditions.
  - Lytag is a by-product of the power station industry, so waste material is recycled and put “back into the ground”.
  - Leca is lightweight, expanded clay balls. They soak up water and are inert; ideal for gardening and green roofing.
- Coir is recycled coconut husk fibre, used to complement the compost. It is resistant to slumping and holds moisture and has high lignin.
- Recycled organic compost sourced from the local camomile and lavender farms which provides slow release of nutrients and water absorption.

We do not use crushed brick or building rubble. Bricks and rubble often contain contaminants and also crush down into fines which can clog the drainage. They can also form a crust layer within the substrate which creates an impermeable layer, killing the sedum.

Wallbarn does not and has never used peat in our substrate.

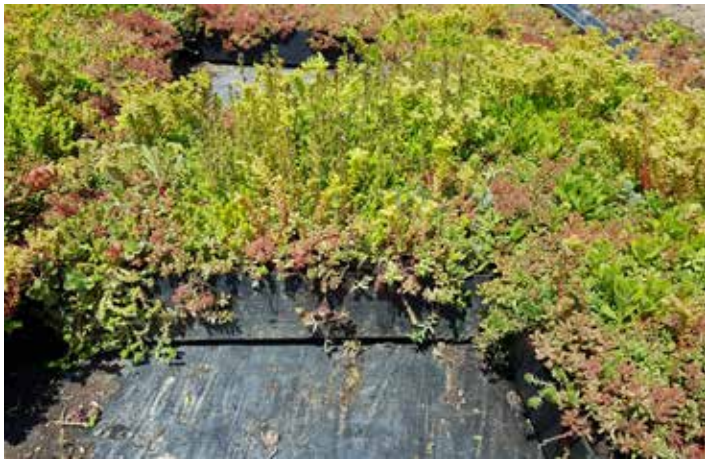

SEDUM & WILDFLOWER

All our M-Tray® sedum and wildflower green roof modules are grown from seed. We source only the finest quality seeds from leading horticultural specialists to ensure comprehensive coverage and long-term viability.

We have selected a large selection of different North European sedum species and native British wildflowers suitable for the British climate to bring biodiversity to the roof space.

More details are given on planting schemes overleaf. Please ask us for a current species list.

‘M-TRAY® - PLANT VARIETIES

Our M-Tray® green roof modules are supplied from stock in two standard types: sedum and sedum / wildflower.

SEDUM

Sedum is a stone crop; a low growing, hardy succulent plant found in mountainous regions and areas with poor soils. This means it can cope with inhospitable conditions such as low nutrient levels, high exposure to wind and drought conditions; making it the ideal plant for green roofing.

The sedum genre is incredibly diverse with many different species and a whole host of different heights, leaf structure and growth patterns. Sedums flower, in fact bringing a huge variety of colour throughout the summer and attracting pollinators.

Wallbarn has chosen a selection of 12 species of North European sedum species which we grow from seed. These species were selection to provide a year round comprehensive green cover of thick leaves in different leaf shapes, colour shades and sizes across the roof space. They are perennial and easy to maintain, all being particularly adept at coping with lack of water.

Wallbarn sedum green roofs flower prolifically, with masses of different yellow, pink and white flowers appearing throughout spring, summer and even in autumn; attracting bees, butterflies and other wildlife to the roof space.

Sedums are completely hardy and will tolerate the most inhospitable conditions. Although they appear red in times of drought and very hot weather, they are not dying but “sleeping”, retaining moisture within their stems and leaves ready to regrow once they get access to water.

Remember, however, that no plant is very drought proof. The more care and attention and crucially the more water the plants receive; the better they will look. If you want green and flowers, water your green roof periodically.

Wallbarn has selected a variety of wildflowers to compliment a limited sedum mix. The sedum plants provide a base cover of year round greening. The wildflowers will grow among and between these plants to give a burst of colour from native British flowers.

The wildflower species are chosen to provide low growing flowers and herbs with where possible succulent leaves and stalks which will rot down after flowering to reduce fire hazard.

They include different varieties of thyme, vetches, campions and thrifts which are native to UK and in some cases becoming rare in the wild. Therefore, we try to reintroduce traditional planting at roof level to sustain local nature.

SEDUM / WILDFLOWER

These are perennial wildflowers which will spread across the roof rather than grow very tall. They have also been selected to cope well with life at height. They are ideally suited to low nutrient and low moisture soils so can cope better in the free draining substrate required for green roofs.

This is not a spring field of meadow plants. Do not think masses of poppies and moon daisies at hip height. Such “ground” wildflowers are not suitable for sustainable green roof construction and can often be dangerous.

Because there is such a large range of wildflowers within the mix they will flower throughout the summer months, attracting a whole host of wildlife to the roof. They will produce seeds which should be collected and sown back into the substrate for long-term performance.

PRODUCTION

The essential elements to growing a top quality and truly sustainable green roof include:

SUBSTRATE MIXING

Our bespoke substrate is produced by putting the ingredients into an agricultural feed mixer with water to create the optimum consistency; before being loaded into a large compost spreader.

TRAY-LAYING

Wallbarn has automated the tray laying process. We have created our own bespoke tray laying machine which is towed behind a tractor. The pallets are stacked onto the laying machine and the trays are then placed onto the upper platform in lines of three units and connected. The trays slide down the ramp slowly still connected to form a single, three abreast line of trays in a dead straight line.

FILLING

The compost spreader is towed by a farm tractor and shoots the substrate into the trays via a conveyor belt at the side. The moving floor ensures that the mixed substrate flows onto the conveyor belt consistently without clogging and the trays are filled evenly.

We overfill the green roof trays to allow for settlement. A second pass is then carried out. Another farm tractor, which can straddle the line of the trays easily, pulls a levelling box which gently presses the substrate into the trays and creates a level, even surface.

HYDROSEEDING

The sedum seeds are incredibly small and ensuring even distribution is not easy. We have developed a hydroseeding system where the seeds are mixed into water and released either with a boom (pictured) or an with an agricultural spinning disc dispenser. This distributes the seed evenly and helps the seeds sink into the substrate slightly to start germination process.

WEEDING NURTURING

We have a full-time maintenance staff at our nursery and they monitor the development and quality of the sedum and wildflower crops whilst they grow. We check the automatic irrigation systems, weed regularly and “gap up” the beds by adding sedum plugs where appropriate.

TIME

Letting Mother Nature work her magic. The plants need to be left to grow and mature in as natural a way as possible. We do not “hot house” them to speed up production. Therefore, they produce strong roots and are hardened to the elements. We can help them along with care and attention, but such things cannot be rushed if we are to produce truly sustainable green roofs.

HARVESTING M-TRAY® FOR TRANSPORT

We have automated our harvesting process and built our own harvesting machine.

The self-propelled machine passes up the bed of trays and the specially designed wedges and spokes lift the trays off the ground and separates them, drawing them up the conveyor belt ramp to the processing platform. The operatives check the M-Tray® for quality and stack them onto pallets in the field.

The pallets are collected by tractor and brought into the yard where they are strapped and labelled. A forklift then moves them onto the delivery vehicle.

Our M-Tray® is harvested and loaded the day before delivery to site. Our sedum green roof systems, therefore, are not stacked for longer than 24 hours

STEP BY STEP INSTALLATION

Wallbarn M-Trays® have all the necessary elements contained within them

1 M-Tray® modules are transported to site on strapped pallets for easy, clean delivery. They can then be craned safely onto the roof if necessary. Because the modules are securely fitted onto the pallets, the green roof can be moved with minimum delay or disruption. It is essential that pallets are unstacked immediately upon delivery.If sedum is packed tightly for more than 24 hours, particularly in heat, it will deteriorate and 'cook'.

2 Unpacking the pallets is a simple process. None of the contents will spill out and each module can easily be carried by one person. The substrate and plants are undisturbed, greatly reducing the shock and enabling the sedum to establish itself across the green roof quickly.

3 Even very difficult to access roof spaces can be fitted with green roofs using the modular system. Restricted areas and occupied buildings have been successfully retro-fitted with M-Tray®.

4 A separation and filtration geotextile layer, supplied by Wallbarn, should be firstly installed. This protects the waterproofing and prevents abrasive damage.

5 Place each module down and then click together using the integrated connection clips and points.

6 If irrigation is being installed this should be connected at the base of the trays and installed during installation of the trays, not after

7 M-Trays can be cut to shape around objects if needed.

8 The edges should be filled with a border of washed riverstones, in accordance with the GRO code of practice. Objects such as roof lights and cables should be surrounded with riverstones to prevent root invasion and act as a fire break

9 An aluminium edge trim can be added to any exposed edges or where the stones need to be separated from objects such as drainage outlets.The modular sections mean detailing around objects is a simple process and clean lines are created.

10 We recommend that hard landscaping sections such as paving and decking, mounted onto Wallbarn pedestals, are installed to allow for regular access. As everything is suspended on top of the deck, drainage is uninterrupted.

A full Installation Guide and instruction videos are available – visit www.wallbarn.com or view our YouTube channel.

FIRE TESTING

The Building Regulations 2010 (as amended) Approved Document B are the main rules for fire safety on largescale, commercial and high rise green roofs.

They reference the 'Fire Performance of Green Roofs and Walls' and state “The main objective in relation to all elements of construction, including roofs, is that they should not significantly contribute to the growth and spread of fire, either internally or externally.....”

To meet these fire regulations stakeholders need to demonstrate that the whole ‘as installed’ roof system has a valid fire certificate. The whole roof system needs to achieve a European classification rating of B ROOF t(4).

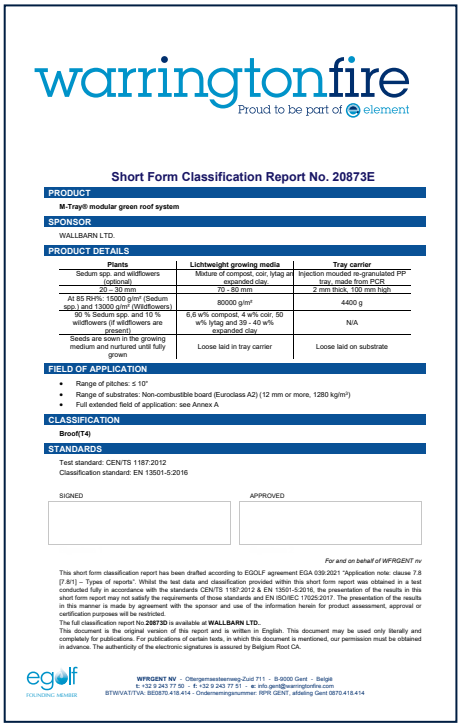

warringtonfire
Proud to be part of element

Short Form Classification Report No. 20873E

PRODUCT

M-Tray® modular green roof system

SPONSOR

WALLBARN LTD.

PRODUCT DETAILS

Plants	Lichtweight growing media	Tray carrier
Sedum spp. and wildflowers (optional)	Mixture of compost, coir, lytag an expanded clay.	Injection mouded re-granulated PP tray, made from PCR
20 – 30 mm	70 - 80 mm	2 mm thick, 100 mm high
At 85 RH%: 15000 g/m² (Sedum spp.) and 13000 g/m² (Wildflowers)	80000 g/m²	4400 g
90 % Sedum spp. and 10 % wildflowers (If wildflowers are present)	6,6 w% compost, 4 w% coir, 50 w% lytag and 39 - 40 w% expanded clay	N/A
Seeds are sown in the growing medium and nurtured until fully grown	Loose laid in tray carrier	Loose laid on substrate

FIELD OF APPLICATION

- Range of pitches: ≤ 10°
- Range of substrates: Non-combustible board (Euroclass A2) (12 mm or more, 1280 kg/m²)
- Full extended field of application: see Annex A

CLASSIFICATION

Broof(T4)

STANDARDS

Test standard: CEN/TS 1187:2012
Classification standard: EN 13501-5:2016

SIGNED APPROVED

For and on behalf of WFRGENT nv

This short form classification report has been drafted according to EGOLF agreement EGA 039:2021 “Application note: clause 7.8 [7.8/1] – Types of reports”. Whilst the test data and classification provided within this short form report was obtained in a test conducted fully in accordance with the standards CEN/TS 1187:2012 & EN 13501-5:2016, the presentation of the results in this short form report may not satisfy the requirements of those standards and EN ISO/IEC 17025:2017. The presentation of the results in this manner is made by agreement with the sponsor and use of the information herein for product assessment, approval or certification purposes will be restricted.
The full classification report No.**20873D** is available at **WALLBARN LTD.**
This document is the original version of this report and is written in English. This document may be used only literally and completely for publications. For publications of certain tests, in which this document is mentioned, our permission must be obtained in advance. The authenticity of the electronic signatures is assured by Belgium Root CA.

egolf FOUNDING MEMBER

WFRGENT NV - Ottergemsesteenweg-Zuid 711 - B-9000 Gent - België
t: +32 9 243 77 50 - **f:** +32 9 243 77 51 - **e:** info.gent@warringtonfire.com
BTW/VAT/TVA: BE0870.418.414 - Ondernemingsnummer: RPR GENT, afdeling Gent 0870.418.414

Physical samples of M-Tray® by Wallbarn were tested by an independent fire authority according to CEN/TS 1187:2012 ***Test 4 Test Methods For External Fire Exposure To Roofs.***

They were burned for 60 minutes and reported zero penetration of fire in all tests across all samples.

This test was carried out within classifications under BS EN 13501-5:2016 ***Fire classification of Construction Products and Building Elements.***

M-Tray® has a classification of B ROOF t(4) EXAP carried out in conformity with CEN/TS 16459:2019.

EXAP is an extended application, meaning M-Tray® can be used as part of a green roof system with a variety of membrane/insulation build-ups so long as all products also have B Roof t(4) EXAP.

Specifiers and contractors need to be sure their green roofs comply to the new regulations.

This is construction law in England. Similar laws apply for Wales, Northern Ireland and in Scotland but there are differences and should be read carefully.

SUBSTRATE COMPLIANCE & PERFORMANCE

FIRE

BS 8616: 2019 Specification for performance parameters and test methods for green roof substrates is the British Standard specifying requirements for all green roof substrates.

This British Standard provides methodologies for testing green roof substrates and lays out the requirements for all physical and chemical characteristics. This includes fire safety criteria.

In order for your green roof to meet building regulations, the substrate should comply to BS 8616:2019.

Wallbarn commissioned an independent consultant to do a thorough analysis of our substrate, who confirmed that we comply to BS 8616:2019 in all aspects.

GROWTH

This independent soil specialist also conducted a series of 12 month growth trials on the Wallbarn substrate.

We took an initial batch of 11 different substrate mixes and grew sedums for 12 months, measuring the results from a number of aspects.The best performing substrate is what we grow our M-Tray® sedum and M-Tray® sedum / wildflower modules into.

We can therefore be assured it complies to all safety rules and is the optimum mix for growing and sustaining extensive green roofs in the long term.

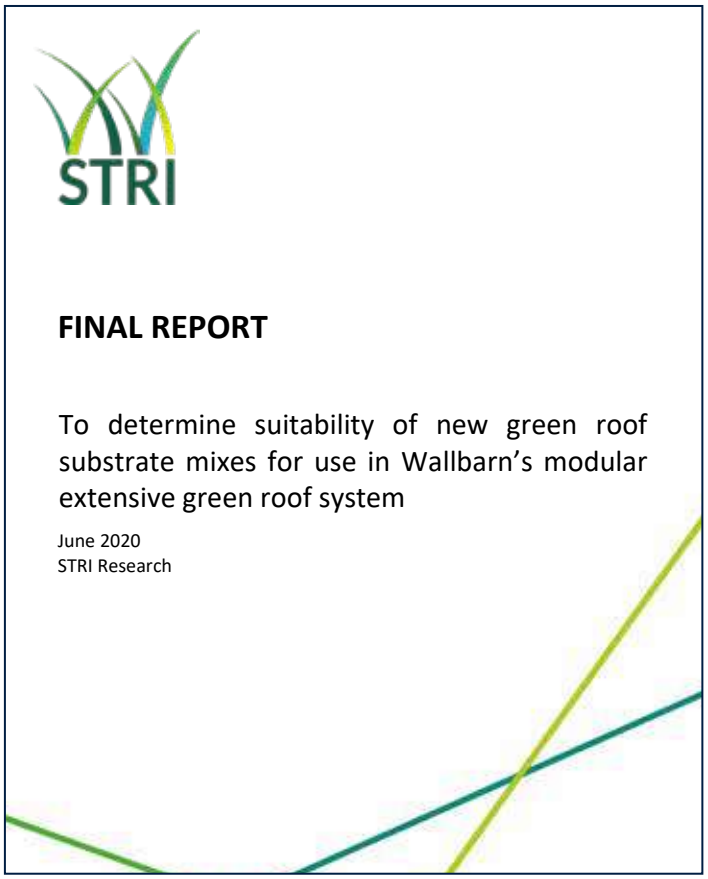
STRI

FINAL REPORT

To determine suitability of new green roof substrate mixes for use in Wallbarn's modular extensive green roof system

June 2020
STRI Research

Plates

Plate 1: Trial site with mixed substrate before plot randomisation

Plate 2: Trial site after plot randomisation and installation of protective wooden edging

Plate 3: Trial site on 29.08.19 (58DAS). *Sedum* seeding just visible with weed ingress

Plate 4: Trial site on 29.08.19 (58DAS). *Sedum* seeding just visible with weed ingress

Plate 13: Treatment 2 on 04.06.20 (142DAS)

Plate 14: Treatment 3 on 04.06.20 (142DAS)

Plate 15: Treatment 4 on 04.06.20 (142DAS)

Plate 16: Treatment 5 on 04.06.20 (142DAS)

Plate 20: Trial site on 24.01.20 (206DAS)

Plate 21: Trial site on 24.04.20 (297DAS)

ROLL-OUT EXTENSIVE GREEN ROOFS

Wallbarn also supplies roll-out systems for larger scale green roof projects or those schemes with complicated shapes or a variety of substrate depths.

The required elements are all supplied to site separately. The protection membranes, separation fabrics and drainage membranes are supplied in large rolls. The substrate and edging pebbles are supplied in bags and the sedum and / or wildflower is supplied rolled up loose blankets.

Roll-out green roof construction is significantly slower than modular and makes a lot more mess. A far greater amount of horticultural and construction skill is required and we recommend that roll-out green roof construction is carried out by experienced landscaping professionals.

Wallbarn can give advice and guidance for roll out extensive, biodiverse and intensive green roof schemes. Please speak to a member of the Wallbarn team for help in design and specification of your project.

ACCESSORIES

EDGING BAR

An aluminium angle can be installed around your green roof modules both to improve the aesthetic finish and to create a separation between the vegetation and areas such as drains and roof lights.

The aluminium profile is right angled where it meets the deck, so it can sit underneath and be weighed-down either by the M-Trays® themselves or by pebbles. These are available in high finish aluminium or a range of powder coated RAL colours.

PEBBLES

Building regulations and the GRO Code stipulate that a border of pebbles should be installed around the perimeter of the green roof, around objects such as rooflights and drainage outlets at certain intervals within the roof to provide a fire break.

We recommend using clean, rounded riverstone pebbles which are free from fines and dirt.

Wallbarn can supply jumbo bags of 1 tonne, 25kg single bags and pallet loads of 40 x 25kg bags from stock to site quickly.

We also have a range of decorative stones in many colours and sizes available.

SUBSTRATE

Wallbarn has spent several years developing the right balance of ingredients to go into the substrate for our M-Tray®. Our substrate can also be purchased separately.

GEOTEXTILE FLEECE

For our green roof products we recommend using our recycled geotextile fleece to act as a separation, filtration and protection layer

IRRIGATION SYSTEMS

Wallbarn supply a range of irrigation systems from simple timer based sprinkler networks to fully automated, web based irrigators, which feature drought and leak detectors.

FERTILISER

We can supply fertiliser with your green roof order or as and when you need it.

CARE & MAINTENANCE

A simple, low maintenance solution supplied layer by layer

Sedum requires less maintenance than other types of green roof because it is so hardy and drought resistant but periodic attention is recommended. A green roof is a living thing which will change significantly over the seasons. It will be at its most splendent in the Spring & Summer months and it is important that care and attention to substrate moisture levels, nutrients and weeds is given throughout the year to maintain healthy growth of the vegetation. A maintenance programme for your green roof should be made for regular intervals, especially in the Spring and Autumn including:

EARLY SPRING

- Removing weeds, especially grass, by hand.
- Removing dead vegetation including leaves and stalks from surface of green roof.
- Clearing debris from drainage outlets.
- "Gapping up" patches of bare substrate by either separating clumps of sedum from the existing roof and planting; buying additional plug plants to insert or spreading sedum cuttings onto the surface of the substrate and watering in fully.
- Cuttings are made by snipping off the tops of the stems from sedum plants. They re-root very efficiently quickly into the substrate.
- Applying Wallbarn Vitax Q4 slow-release granular fertiliser.

MID SUMMER

- Watering – Sedum will survive for periods without rain, but if it starts to turn red it is in distress. Although in times of drought the sedum goes into suspended animation, if in times of very high temperatures and no rainfall it is possible to irrigate the green roof, do so. An integrated irrigation system built into the green roof during installation is recommended.

AUTUMN

- Wait until all sedums and wildflowers have finished flowering.
- Removing weeds, especially grass, using tools to remove all roots.
- Clearing dead vegetation using a rake. Remove dead stalks and other items which can cause a fire hazard. If any dead vegetation is holding seeds post flowering spread these seeds onto the surface of the substrate and rake in where possible.
- Clearing debris from drainage outlets.
- "Gapping up" bare patches with sedum clumps, purchased plug plants or sedum cuttings.
- Watering in fully.
- Draining irrigation systems before frost appears.
- Applying Wallbarn Vitax Q4 slow-release granular fertiliser.

Sedum changes colour and leaf structure naturally throughout the year. Some keep their leaves, others die back, depending on the type of species. They can turn red during droughts, strong winds and frosts. This is normal and they will revert to their green hues over time.

TECHNICAL DATA

TECHNICAL DATA	
PRODUCT	**M-TRAY® MODULAR GREEN ROOF**
Suitable for	Extensive green roof plants with lightweight, free-draining substrate
Type of construction	Permanent
Width / breadth	500mm x 500mm
Height	100mm
Shape of walls / sides	Tapered / angled
Units per m^2	4
Material	Recycled polypropylene
Thickness of material	3mm
Internal ridge height / reservoir height	20mm
Number of internal drainage reservoirs	25
Drainage holes per unit	8
Distance between trays at base	20mm
Distance between trays at 50mm from base	10mm
Dry weight (empty)	1.1Kg
Weight field capacity[1]	25kg
Connectors Per Unit	4
Number Of Handles On Underside	4
Detail Of Corners / Edges	Smooth / reinforced

1. Filled & fully planted field capacity of wallbarn substrate & mature sedum plants during / after abnormal rainfall conditions.

EXPORT & LICENSING OPPORTUNITIES

UK	Registered Design	6140192
UK	Registered Trademark	UK00003041800
UK	Registered Cloned EU design post-Brexit	90029539430001
USA	US Patent	D787,186S
USA	Registered Design Application	29/802,855
EU	Registered Design	002953943-0001
EU	Registered Tradename	015388523
Canada	Registered Design Application	205094
Argentina	Registered Design	Nº100508
UAE	Registered Design	7498

An M-Tray® “Bible” is available to guide partners in the growing, installation and long term maintenance processes and we can draw on many years of experience. As well as supplying live products for installation on UK green roofs and landscaping spaces, Wallbarn is committed to M-Tray® as an export product.

M-Tray® by Wallbarn has a number of different territorial registered designs and patents including:

Licensing opportunities are available for both the M-Tray® brand and the mould, which can be granted to specific partner companies across the globe.

An M-Tray® “Bible” is available to guide partners in the growing, installation and long term maintenance processes and we can draw on many years of experience.

Wallbarn

Solutions for rooftop living

wallbarn.com
+44 (0)208 916 2222
sales@wallbarn.com

Unit 16
Capital Business Centre
22 Carlton Road
South Croydon CR2 0BS

Solutions for rooftop living

wallbarn.com
+44 (0)208 916 2222
sales@wallbarn.com

Unit 16
Capital Business Centre
22 Carlton Road
South Croydon CR2 0BS

TERMS AND CONDITIONS OF SUPPLY

These terms and conditions ("**Terms**") govern the sale of all products detailed in an Order Confirmation ("**Products**") and services ("**Services**") provided by WALLBARN LIMITED company number 01500958 of Unit 16, Capital Business Centre, 22 Carlton Road, South Croydon. CR2 0BS. United Kingdom (the "**Supplier**"). The Terms apply notwithstanding any conflicting, contrary or additional terms and conditions in any ("**Purchase Order**") or other document or communication from the Customer. The Customer is a person (whether a natural person, corporate or unincorporated body (whether or not having separate legal personality), which is contracting in a business capacity) placing any order to purchase any Products and/or Services provided by the Supplier. These Terms may only be waived or modified in a written agreement signed by an authorised representative of the Supplier. Neither the Supplier's acknowledgment of a Purchase Order nor the Supplier's failure to object to conflicting, contrary or additional terms and conditions in a Purchase Order shall be deemed an acceptance of such terms and conditions or a waiver of the provisions hereof.

1. Orders

A Purchase Order, PO number or request for Products is subject to acceptance by the Supplier, which shall be communicated in an order confirmation or acceptance of a PO number ("**Order Confirmation**"). An Order Confirmation will usually be issued (without obligation) within three days from the date on which the Customer submitted the Purchase Order, PO number or request for Products. A Purchase Order is an offer by the Customer, but shall not be binding on the Customer until Order a Confirmation is issued by the Supplier. Any quote given by the Supplier shall not constitute an offer.

The Order Confirmation and these Terms shall form a legally binding agreement between the Customer and the Supplier. These Terms supersede any terms which may be contained on a Purchase Order and all previous agreements. Should there be any conflict between any terms on a Purchase Order and these Terms, then these Terms shall prevail.

Supplier shall arrange delivery of the Products in accordance with the Order Confirmation and these Terms.

2. Delivery of the products

Supplier shall appoint a suitable carrier ("**Carrier**") to deliver the Products. Delivery of the Products shall take place at the Customer's premises or such other location as stated in the Order Confirmation ("**Delivery Point**"). Acceptance of any change to the Delivery Point requested by the Customer shall be at the Supplier's sole discretion and the Customer shall be liable for any additional costs incurred by the Supplier as a result of such change. The Supplier shall arrange for suitable transport to the Delivery Point. Delivery of the Products shall be completed when they are signed for by any individual at the Delivery Point.

Delivery dates are approximate only and time is not of the essence for delivery of the Products. The Supplier may effect delivery in one or more instalments. Delay in delivery of one instalment shall not entitle the Customer to cancel other instalments. The Customer shall report any discrepancy in shipment quality or damage within five days of delivery.

The Customer accepts that the Supplier is not responsible for damage due to the Carrier's or Customer's non-compliance with special handling or inspection warnings on packages.

If any Products have damaged packaging at the Delivery Point, the Customer may reject the Products back to the Carrier and inform the Supplier as soon as is practicable. If the Customer accepts the package, then the Customer must advise the Carrier and the Supplier in writing no later than three days after delivery, explaining that the contents were unexamined at the time of receipt.

If the Products do not comply with the Warranty, then the Customer may, within five days of delivery at the Delivery Point give written notice of rejection to the Supplier.

In either case, the Customer shall return the relevant Products (unaltered) to the Supplier for inspection.

If the Customer fails to give such notice, then the Products shall be deemed to comply with the Warranty and the Customer shall have accepted delivery. The Supplier shall have no further liability to the Customer with respect to those Products.

If the Customer rejects any delivery of the Products which do not comply with the Warranty; and the Supplier (acting reasonably) accepts that the Products do not comply with the Warranty (which reasonable decision will be final), then the Supplier shall within 7 days of that acceptance:

supply replacement Products which comply with the Warranty; or

notify the Customer that it is unable to supply replacement Products, in which case the Supplier shall grant to the Customer a credit equal to the value of the Products which the Supplier agrees do not comply with the Warranty. This shall be the Customer's sole remedy for breach of Warranty and/or breach of these Terms.

The Customer shall return Products in the original manufacturer's shipping cartons complete with all packing materials, at the Customer's expense and risk. If returned Products are claimed to be defective under the Warranty, then a complete description of the nature of the defect must be included with the returned Products. Products not eligible for return shall be returned back to the Customer at the Customer's expense.

3. Import and export licences

The Customer is responsible for obtaining, at its own cost, such import/export licences and other consents in relation to the Products as are required from time to time and, if required by the Supplier, the Customer shall make those licences and consents available to the Supplier prior to the relevant shipment.

4. Prices

The Product or Services prices shall be as specified in the Supplier's quote, for the period specified. If no period is specified, prices shall be applicable for thirty (30) days from the date of the Supplier's quote. Notwithstanding the foregoing, prices shall be subject to increase if there is an increase in the Supplier's costs or other circumstances beyond the Supplier's control. Prices are inclusive of import duties, insurance and shipping charges unless specified otherwise in the quote, but exclusive of VAT or applicable sales taxes.

5. Payment terms

Customer shall pay the Supplier prices for the Products stated in the invoice or Order Confirmation in GBP by telegraphic transfer to the bank account specified in the invoice or Order Confirmation in advance of dispatch of any Products, by credit card or by SagePay (unless a credit account has been agreed and set up by the Supplier).

To reduce the likelihood of fraud, it is advised that Customers should not accept or transfer payment using alternative bank details provided by email unless these have been verified by a subsequent telephone call to the Supplier. Customers should not trust any email from the Supplier requesting that funds be sent to a different bank account other than that set out in the Order Confirmation or invoice. The Supplier shall not be liable for any money sent to a wrong account, under any circumstances.

If the Customer is required under any applicable law to withhold or deduct any amount from the payments due to the Supplier, the Customer shall increase the sum it pays to the Supplier by the amount necessary to leave the Supplier with an amount equal to the sum it would have received if no such withholdings or deductions had been made.

The time for payment shall be of the essence and no payment shall be deemed to have been made until the Supplier has received payment in cleared funds.

Where a credit account is set up, payment shall be due within thirty days from the date of invoice or as otherwise specified by the Supplier. All orders are subject to credit approval by the Supplier. The Supplier may, in its sole discretion, at any time, withdraw credit facilities, change the terms of the Customer's credit and/or require payment of any or all amounts due or to become due before shipment of the Products.

The Customer agrees to submit such financial information from time to time as may be reasonably requested by the Supplier for the establishment and continuation of credit terms. If the Supplier believes in good faith that the Customer's ability to make payments may be impaired or if the Customer fails to pay any invoice when it falls due, the Supplier may suspend delivery of any Products until such payment is made, and/or cancel any further agreed order or any remaining balance thereof, and the Customer shall remain liable to pay for any Products already shipped and all nonstandard products ordered by the Customer.

Cheques are accepted subject to collection and the date of collection shall be deemed the date of payment. Any payment received from the Customer may be applied by the Supplier against any obligation owing from the Customer to the Supplier, regardless of any statement appearing on or referring to such cheque, without discharging the Customer's liability for any additional amounts owing from the Customer to the Supplier, and the acceptance by the Supplier of such payment shall not constitute a waiver of the Supplier's right to pursue the collection of any remaining balance.

If the Customer fails to make any payment due to the Supplier under these Terms by the due date for payment, then, without limiting the Supplier's remedies under these Terms, the Customer shall pay interest on the overdue amount at the rate of 1.5% above the Bank of England's Base Rate per month (or such other amount as is the maximum allowed by law). Such interest shall accrue on a daily basis from the due date until actual payment of the overdue amount in full, whether before or after judgment. The Customer shall pay the interest together with the overdue amount.

All amounts due under these Terms shall be paid by the Customer to the Supplier in full without any set-off, counterclaim, deduction or withholding (other than any deduction or withholding of tax as required by law).

6. Title and risk

Risk in and responsibility for the Products shall pass to the Customer on delivery.

Any additional transportation charges, duties and other costs will be stated on the invoice and shall be paid by the Customer in addition to the price of Products. The Customer irrevocably agrees that the Supplier or its agents can enter the Customer's premises at any time, at the Customers cost, without notice to remove any Products for which payment is in default. Demand for the return or recovery of Products shall not discharge the Customer's liability to pay the whole of the invoice or the right of the Supplier to sue for the whole invoice amount plus legal costs.

Title to the Products shall not pass to the Customer until the Supplier has received payment in full of all monies owed by the Customer to the Supplier.

Until title to the Products passes to the Customer, the Customer shall ensure the Products are:

are stored separately from other goods held by the Customer, are unaltered and shall be clearly identifiable as the property of the Supplier;

adequately stored and maintained in a satisfactory condition; and

insured for an amount at least equal to their price and in the event of a claim on such policy (which the Customer shall make should they become damaged or lost) any proceeds of the insurance policy shall be held on trust for the Supplier and paid to the Supplier together with any shortfall in the amount due to the Supplier.

The Customer grants to the Supplier an irrevocable licence for the Supplier, its agents and employees to enter any premises where the Products are stored to inspect, count and recover them.

7. Changes to orders

The Supplier may on giving written notice to the Customer:

amend any orders which have not been fulfilled pursuant to an Order Confirmation to exclude one or more of the Products;

include any alternative products (provided they are materially similar in form, fit and function to the Products stated in the Order Confirmation); or

cancel such orders.

The Supplier may cancel any order which has not been fulfilled pursuant to an Order Confirmation in the event of the Customer's material breach of these Terms and/or in the event of the Customers insolvency, winding up, bankruptcy, appointment of an administrator or receiver or if the Customer ceases or threatens to cease to trade and/or any analogous or similar proceedings. Cancellation shall not affect any rights, remedies, obligations or liabilities of either party that have accrued up to the date of cancellation including the right to claim damages in respect of any breach of these Terms which existed at or before such date.

8. Services

Where applicable, the Supplier shall provide Services to the Customer in accordance with service terms that shall be agreed between the parties.

Where there is any conflict between these Terms and any additional service terms agreed, the additional service terms shall prevail.

9. Warranty

The Supplier warrants that all Products sold to the Customer under these Terms will conform in all material respects to the applicable manufacturer's specifications for such Products (the "**Warranty**"). All other warranties or conditions (whether express or implied) as to quality, condition, description, compliance with sample or fitness for purpose are excluded from these Terms to the fullest extent permitted by law.

The Supplier's liability under the Warranty is limited, at the Supplier's election, to (a) a refund of the Customer's purchase price for such Products (without interest); (b) repair of such Products; or (c) replacement of such Products; provided, however, that such Products must be returned to the Supplier, within the manufacturer's warranty period, transportation charges prepaid. The Supplier shall transfer to the Customer any transferable warranties and indemnities (if any and to the extent possible) that the Supplier receives from the manufacturer of the Products. The Supplier shall have no liability under the Warranty or otherwise, where the Customer (or any third party) uses a Product for a purpose other than as set out in the description of the Product in the Order Confirmation.

10. Intellectual property rights

The Customer acknowledges that all intellectual property rights (including without limitation copyright and related rights, design rights, moral rights, trademarks and service marks) ("**Intellectual Property Rights**") in the Products are the Supplier's (or its licensor's) property and nothing in these Terms shall be construed as conferring any licence or granting any rights in favour of the Customer in relation to the Intellectual Property Rights. Any reputation in any trade marks affixed or applied to the Products shall accrue to the sole benefit of the Supplier or any other owner of the trade marks from time to time.

The Customer shall not repackage the Products and/or remove any Intellectual Property Rights notices, confidential or proprietary legends or identification from the Products.

The Customer shall not use (other than as permitted in these Terms) or seek to register any trade mark or trade name (including any company name) which is identical to, confusingly similar to or incorporates any trade mark or trade name which the Supplier or any associated company of Supplier owns or claims rights in anywhere in the world.

Where the Customer wishes to have the Supplier apply the Customer's own trademarks to the Products on its behalf, the Customer hereby grants a licence to the Supplier under its trademarks for that purpose.

11. Force majeure

The Supplier shall not be in breach of these Terms nor liable for delay in performing, or failure to perform, any of its obligations under these Terms if such delay or failure result from events, circumstances or causes beyond its reasonable control. In such circumstances the time for performance shall be extended by a period equivalent to the period during which performance of the obligation has been delayed or failed to be performed; or the Supplier may, at its option, cancel any order or remaining part thereof without liability by giving notice of such cancellation to the Customer.

12. Exclusion and limitation of liability

Nothing in these Terms shall limit or exclude the Supplier's liability for: death or personal injury caused by its negligence or the negligence of its employees, agents or subcontractors; fraud or fraudulent misrepresentation; or breach of the terms implied by section 2 of the Supply of Goods and Services Act 1982 (title and quiet possession) or any other liability which cannot be limited or excluded by applicable law.

All warranties, conditions and terms not expressly set out in these Terms, whether implied by statute, common law or otherwise (including, without limitation, warranties as to satisfactory quality and fitness for purpose) are excluded to the fullest extent permitted by law. The terms and conditions implied by sections 3 to 5 of the Supply of Goods and Services Act 1982 are, to the fullest extent permitted by law, excluded from these Terms.

The Supplier shall not be liable to the Customer for:

> any indirect, special or consequential loss or damage (including but not limited to penalty charges for delay to a project); loss of data or other equipment or property; economic loss or damage; incurring of liability for loss or damage of any nature whatsoever suffered by third parties (including in each case incidental and punitive damages); or
>
> any loss of actual or anticipated profit, interest, revenue, anticipated savings or business or damage to goodwill, even if the Supplier is advised in advance of the possibility of any such losses or damages.

The Supplier shall not be liable for any losses arising from the Customer's subsequent use or misuse of the Products including (without limitation): fair wear and tear; wilful damage; the Customer's negligence, or that of its agents or employees, any failure to follow the Supplier's instructions as to use of the Products; abnormal conditions beyond those referred to in the applicable manufacturer's specifications; or any alteration or repair of the Products by any manufacturing process or otherwise.

The Supplier is not liable for a defect in the Products unless it is notified to the Supplier in accordance with these Terms.

The Supplier is not liable for: shortages in the quantity of Products delivered or damage to or loss of all or part of the Products in transit unless the Customer notifies the Supplier in accordance with these Terms.

The Supplier's total liability in contract, tort (including negligence), misrepresentation or otherwise in relation to these Terms shall be limited to the amount paid by the Customer for Products subject to such claim. The Customer acknowledges and agrees that the price for the Products reflects the limitations of liability contained in these Terms.

13. General

These Terms and any Order Confirmation constitute the entire agreement between the parties and supersede all previous agreements between them, whether written or oral, relating to its subject matter. Each party agrees that it shall have no remedies in respect of any statement, representation, assurance or warranty (whether made innocently or negligently) that is not set out in these Terms. Each party agrees that it shall have no claim for innocent or negligent misrepresentation or negligent misstatement based on any statement in these Terms. Each of the parties warrants to the other that it has full power and authority to enter into and perform these Terms. If statements or advice, technical or otherwise, are offered or given to the Customer, then Supplier shall have no responsibility or liability for the content or use of such statements

or advice. Each party unconditionally waives any rights it may have to claim damages against the other on the basis of any oral or written statement made by the other. Each party unconditionally waives any rights it may have to seek to rescind these Terms on the basis of any statement made by the other (whether made carelessly or not), unless such statement was made fraudulently. The Customer shall not, without the prior written consent of the Supplier, assign, transfer, mortgage, charge, subcontract, declare a trust over or deal in any other manner with any of its rights and obligations under these Terms or any order pursuant to an Order Confirmation. If any provision or part-provision of these Terms is or becomes invalid, illegal or unenforceable, it shall be deemed modified to the minimum extent necessary to make it valid, legal and enforceable. If such modification is not possible, the relevant provision or part-provision shall be deemed deleted. Any modification to or deletion of a provision or part-provision under this clause shall not affect the validity and enforceability of the rest of these Terms. No variation of these Terms shall be effective unless it is in writing and signed by the parties (or their authorised representatives). No failure or delay by a party to exercise any right or remedy provided under these Terms or by law shall constitute a waiver of that or any other right or remedy, nor shall it prevent or restrict the further exercise of that or any other right or remedy. No single or partial exercise of such right or remedy shall prevent or restrict the further exercise of that or any other right or remedy. No person who is not party to these Terms shall have any right to enforce them.

14. Notices

Any notice or other communication given to a party under or in connection with these Terms shall be in writing and shall be: delivered by hand or by pre-paid first-class post or other next working day delivery service at its registered office (if a company) or its principal place of business (in any other case) or sent by email to the most recent email address specified in a Purchase Order or Order Confirmation.

Any notice or communication shall be deemed to have been received:

if delivered by hand, on signature of a delivery receipt or at the time the notice is left at the proper address;

if sent by pre-paid first-class post or other next working day delivery service, at 9.00 am on the second business day (being a day on Monday to Friday which is not a bank or national holiday in England) after posting or at the time recorded by the delivery service.

15. Governing law and exclusive jurisdiction

These Terms and any dispute or claim arising out of or in connection with them or their subject matter or formation (including non-contractual disputes or claims) shall be governed by and construed in accordance with the laws of England. For the avoidance of doubt, the United Nations Convention on the International Sale of Goods shall not apply to these Terms.

Each party irrevocably agrees that the courts of England shall have exclusive jurisdiction to settle any dispute or claim (including non-contractual disputes or claims) arising out of or in connection with these Terms or their subject matter or formation.

ENDS

M-Tray® green roof installation services

Additional Terms & Conditions

Wallbarn Ltd have assumed access to the site is suitable for delivery by articulated lorry. We assume that site operatives will have clear and unrestricted access and be able to complete all works within one continuous visit.

All prices quoted exclude VAT. All prices are valid for one month from the date of creation unless expressly agreed otherwise in writing. Prices do not include for any edge protection; it is assumed that on commencement of site works all necessary scaffold and/or edge protection is in place and provided by others to enable the installation of our works in a safe manner.
Installation prices exclude either supply or supply and installation of loose laid edging unless otherwise stated.

Installation prices exclude installation of irrigation system and maintenance of green roof unless otherwise stated.

Installation prices are based on our materials being lifted and dropped to ALL relevant work areas by crane (supplied/operated by the customer) unless otherwise stated. Should the method of lifting differ (i.e. hoisting/manual distribution etc.) then Wallbarn Ltd reserve the right to renegotiate the rates.
The unloading of material deliveries to site and the distribution of materials at ground level are excluded from our prices and deemed to be the responsibility of the customer.
One hour offload time is allowed for vehicle deliveries. Unloading or standing time of excess of one hour or part of, will be charged at £100 plus VAT. Changes in taxes and exchange rates will be passed on.

Any additional work over and above the agreed contract will be priced and charged separately. Where these additional items arise, the installer will price the work and you will agree in writing before we carry out the work. A verbal instruction will constitute a works order. Costs to repair damage caused by third parties will be chargeable. All waste arising from the installation and material packaging will be segregated into appropriate skips on site provided by the customer.
Leak testing of roofs must take place only on the day of roof handover to the installation team. A certificate of the testing must be produced thereafter to provide evidence of the water tightness. Testing prior to this date will not be accepted as proof of water tightness.
It is assumed that weight loading calculations have been approved by a structural engineer. This is the responsibility of the customer. Supply and / or installation prices do not allow for a setting-out engineer.

All goods remain the ownership of Wallbarn Ltd and do not pass to the customer until they have been paid for in full. Please see our terms & Conditions of Supply.
Risks in the goods passes to the customer when they are in, on or form part of their property.

Maintenance Schedule for Wallbarn M-Tray® Green Roof Systems

1.0 Introduction

1.1 Green roofs are living structures and as such need attention throughout their lifespan. Some vegetation types such a sedum are planted as they require less maintenance than grass roofs for example. However, regular attention to soil moisture and feed levels as well as the removal of weeds is essential to maintain optimum performance.

2.0 Extensive M-Tray® modular roofs

2.1 The M-Tray® system is a nursery grown portable modular system that consists of a recycled Polypropylene tray filled with a blend of mineral and organic substrate and pre-grown with either:
Sedums or Sedum and wildflowers.

2.2 Spring schedule

- Remove weeds by hand pulling only
- Apply Wallbarn slow release granular fertiliser at a rate of 50gsm
- Clear debris from drainage outlets
- Generally inspect vegetation area and monitor poor growth areas
- Insert cuttings from good growth areas into bad growth areas
- Check irrigation system (if applicable) and replace timer batteries

2.3 Autumn schedule

- Remove weeds by hand pulling only
- Clear debris from drainage outlets
- Generally inspect vegetation area and monitor poor growth areas
- Cut back dead stalks or dying vegetation
- Insert cuttings from good growth areas into bad growth areas
- Check irrigation system (if applicable) and drain down

3.0 General points

3.1 Sedum. Sedum is a unique plant in that its metabolism is reversed from most other plants. Sedum closes its stamen during the day which contributes to it being more efficient at conserving water. Sedum leaves will change their colour at times throughout the year and will often take on a russet colour during, drought, strong wind and frost. This is normal and they will revert to their normal green hue over time. Should the stems and leaves start to 'shrivel' back then this is a sign of a problem and in the main lack of water. Irrigation must be applied to reverse this and the levels of water checked for several weeks until the sedum has recovered.
The M-Tray® is populated with up to 13 species of Sedum all of which are flowering. See the attached Species list.

3.2 Wildflowers. Wildflowers are weeds and weeds are wildflowers and so care must be taken during maintenance NOT to pull out healthy and desired plants. Wildflowers by their nature thrive on poor soils where there is little competition however they are more vulnerable to drought. Drying of stems and leaves will be seen through hot dry periods and although irrigation can be applied it is not a requisite as the 'stressed' plants will flower and seed to propagate themselves and will often recover with the onset of rain.

M-Tray® Installation guide

This is your step-by-step guide to unpacking, assembling and installing your Wallbarn product

1 Delivery

The M-Trays® are delivered on pallets to the kerbside. It is the buyer's responsibility to move the pallets from the kerb to the roof/podium.

2 Unpack immediately

Unpack the M-Trays® from the pallets immediately upon delivery to prevent the sedum plants being crushed. If left stacked for more than 24hrs sedum will start to decompose and die.

3 Handballing trays

The trays can be easily transported by hand to where they are being laid.

4 Prepare your roof

Ensure the roof membrane is properly protected and free from dirt and debris. Roll out the supplied geotextile fabric, ensuring an overlap of 20cm. This will act as a protective layer and a filter for drainage.

5 Install metal edging

Once the geotextile is laid, install your aluminium edging (optional). This is placed around the perimeter and loose laid into position. Do not mechanically fix the edging into the waterproofing membrane.

6 Start placing the trays

The trays are laid over the geotextile fabric and clicked together. They fit over the base of the edging bar.

7 Tray orientation

Each module has 2 x clips on the North side and the East side; and 2 x recesses on the South side and the West side.

8 Lay irrigation piping

If an irrigation system has been purchased, install as you lay the modules (see irrigation guide) by laying the pipes in between each tray at the base.

9 Aligning your trays

Repeat the process across the roof taking care to ensure the rows of M-Tray® are properly aligned.

10 Clipping trays together

Click each module into position ensuring clips are connected over the recess points.

11 Adapt the trays

For curves, details and end-of-runs, the M-Tray® modules can be easily adapted using a wood saw. Take care not to dislodge the substrate or vegetation too much.

12 Press open sides together

The open side(s) must always be pressed up to the side of the neighbouring M-Tray® in order to retain the substrate / growing medium.

13 Create a hard border

Fire Regulations state that M-Trays® must not be installed right up to buildings, walls, roof lights, hatches, mansafes, vents, drainage outlets, or other protruding objects.

14 Riverstone pebbles

A riverstone pebble border of at least 200mm width should be installed at these points (See GRO Code for guidance on building green roofs).

15 Irrigate once installed

After installing the modules, it is essential that you water them thoroughly until fully saturated.

If an irrigation system has not been installed, water by hand.

16 Fertilize the vegetation

It is recommended that you scatter slow-release fertilizer by hand across the whole roof at the rate of 25 grammes per m2 (a handful).

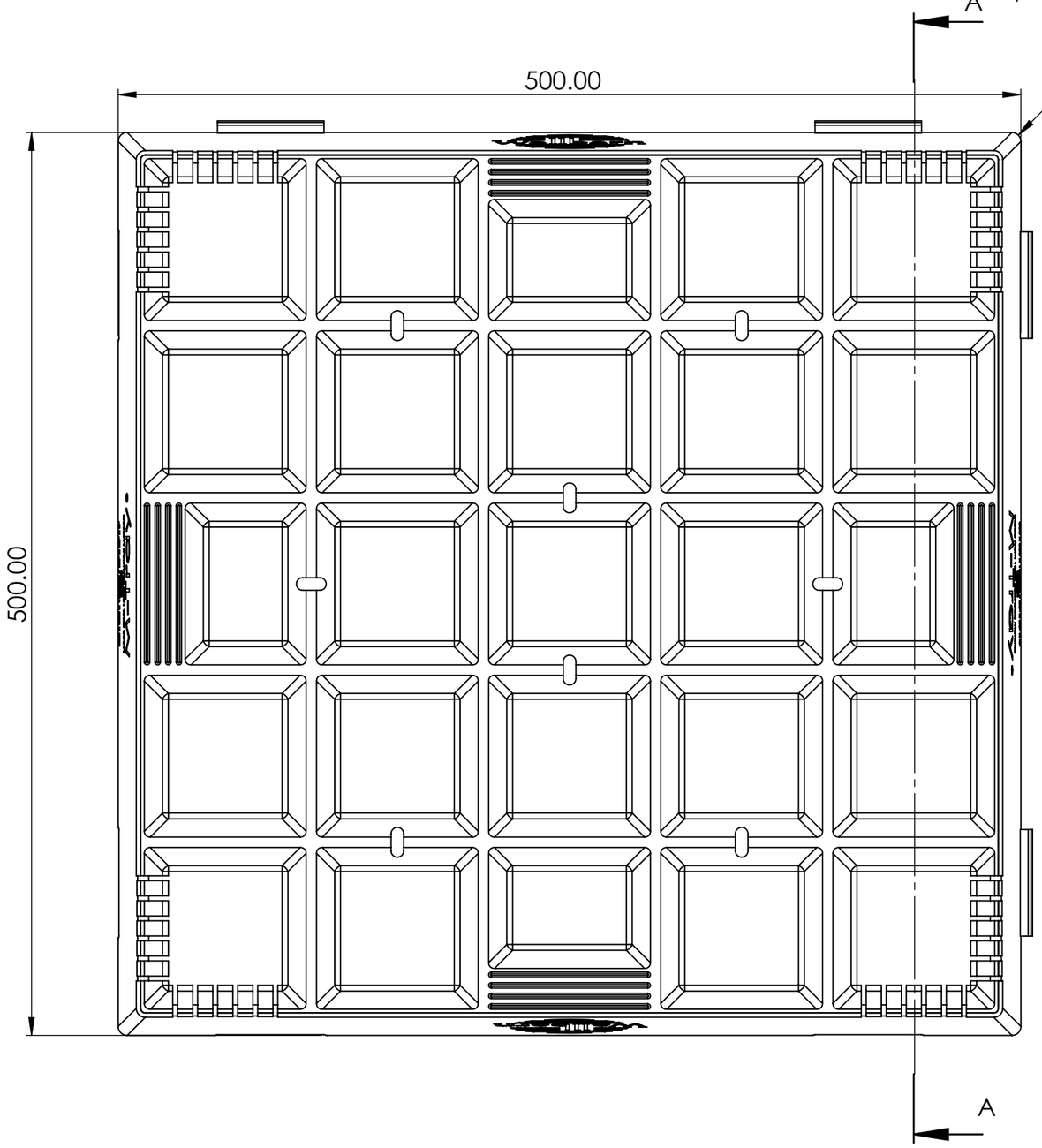

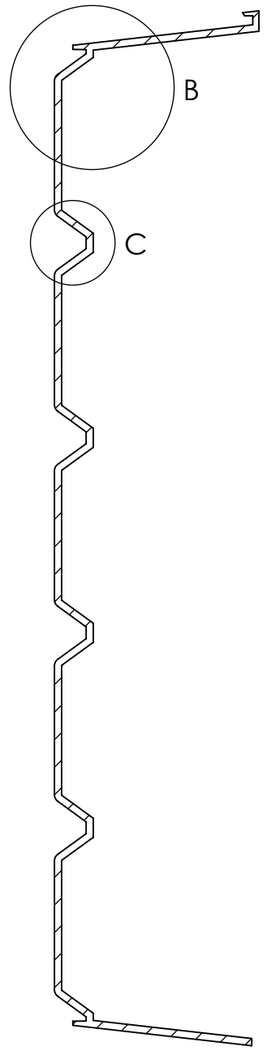

SECTION A-A

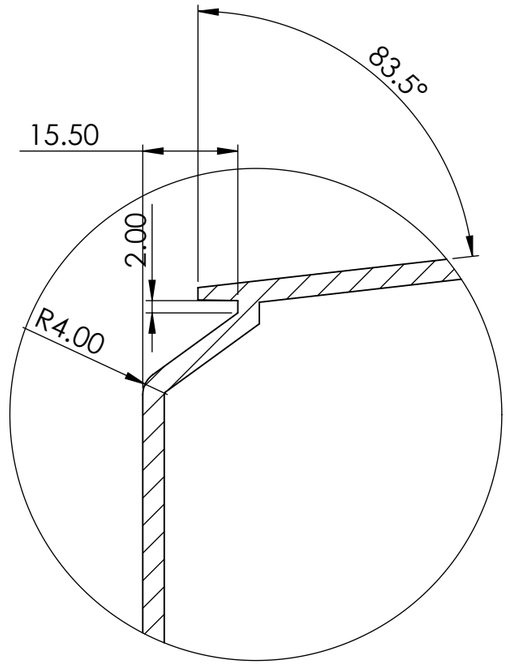

DETAIL B
SCALE 1 : 1

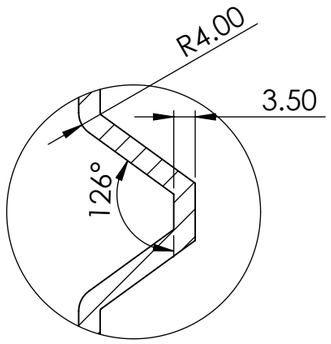

DETAIL C
SCALE 1 : 1

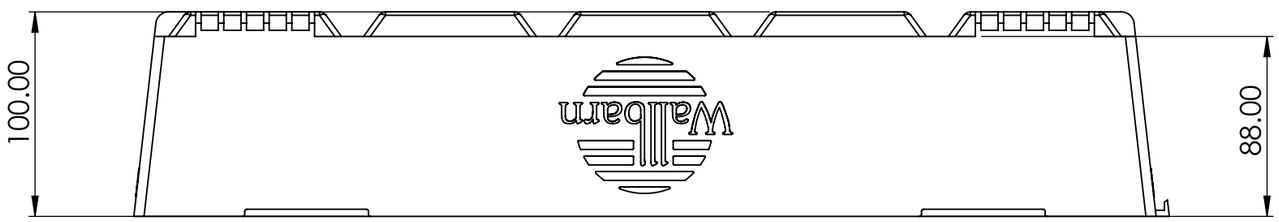

	DESIGNER: Wallbarn Ltd COMPANY: Wallbarn Ltd		
EMAIL: enquiries@solidpeople.co.uk PHONE: 01727 617780	TITLE: WallbarnLtd.M-Tray.v1		
Navigation House 48 Millgate Newark NG24 4TR	SIZE **A3**	DWG. NO. 1	REV 0
	SCALE: 1:3		SHEET 1 OF 5
.. COMPANY PROPRIETRY NOTE .. Information on this drawing may not be disclosed without the written authorisation from the parties involved in its creation.	DRAWN BY: Benjamin Wilson DRAWN DATE: 13/04/2021		

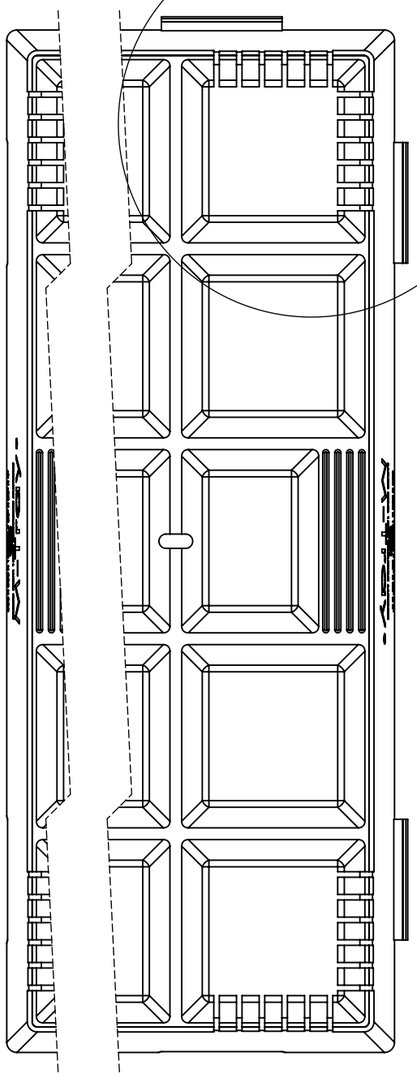

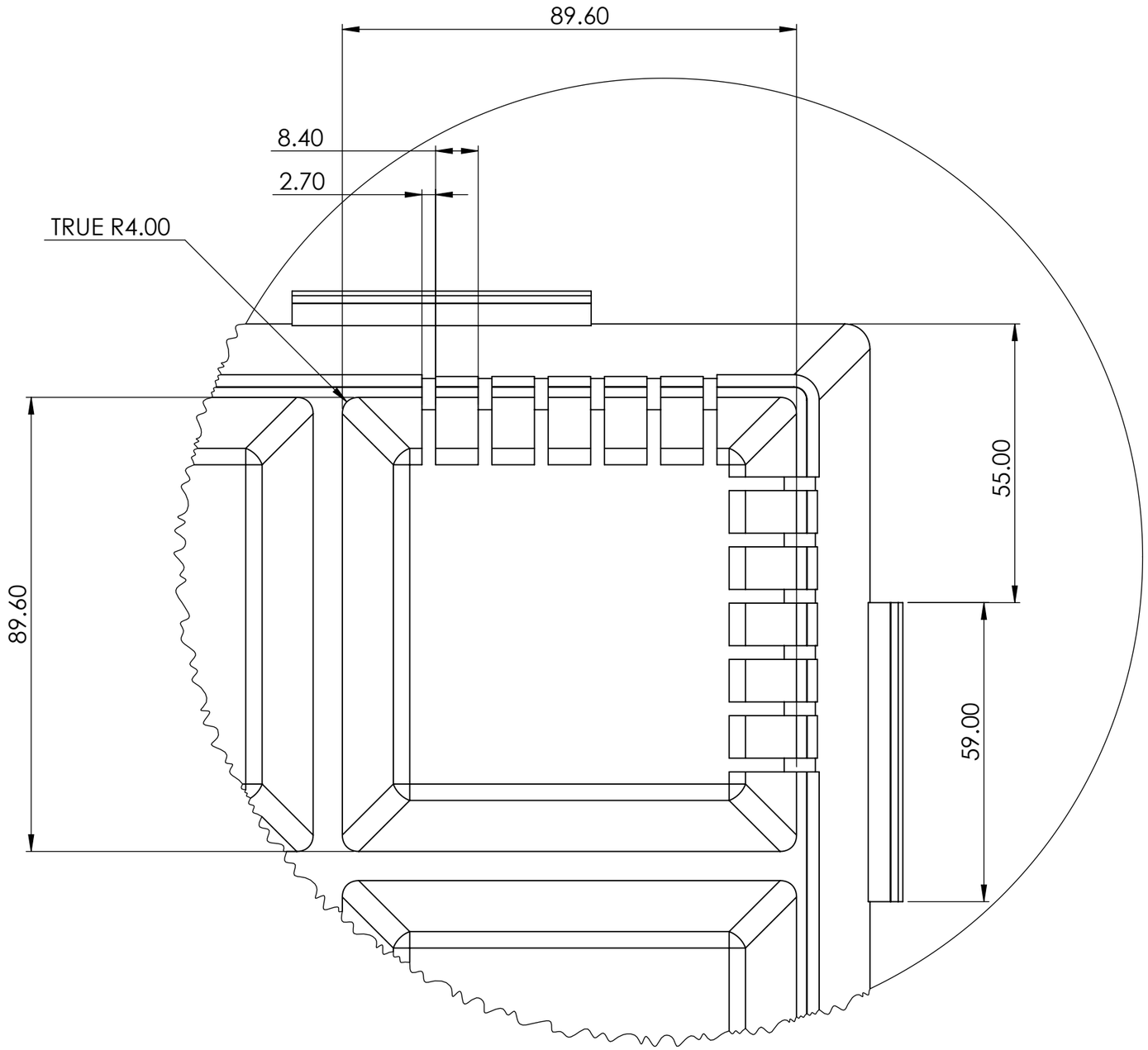

DETAIL D
SCALE 1 : 1

	DESIGNER: Wallbarn Ltd COMPANY: Wallbarn Ltd		
EMAIL: enquiries@solidpeople.co.uk PHONE: 01727 617780	TITLE: WallbarnLtd.M-Tray.v1 SIZE		
Navigation House 48 Millgate Newark NG24 4TR	**A3**	DWG. NO. 1	REV 0
			SHEET 2 OF 5
.. COMPANY PROPRIETRY NOTE .. Information on this drawing may not be disclosed without the written authorisation from the parties involved in its creation.	DRAWN BY: Benjamin Wilson DRAWN DATE: 13/04/2021		

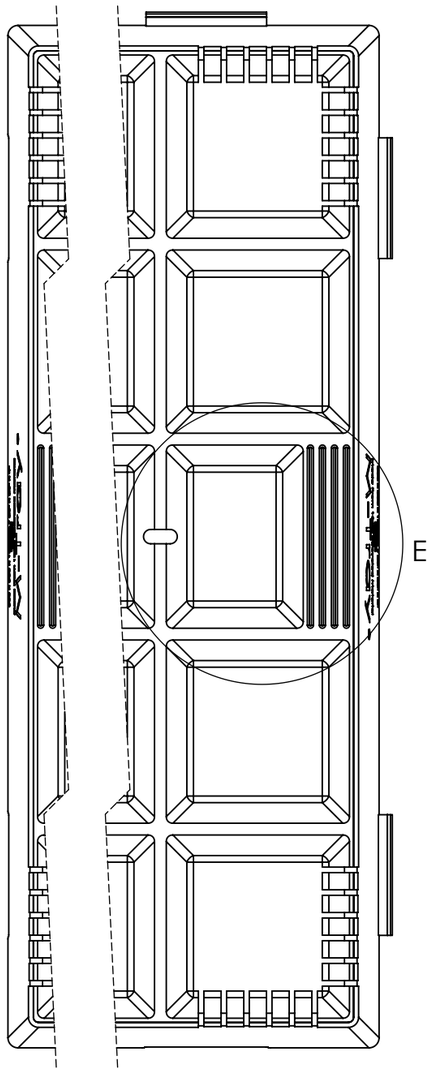

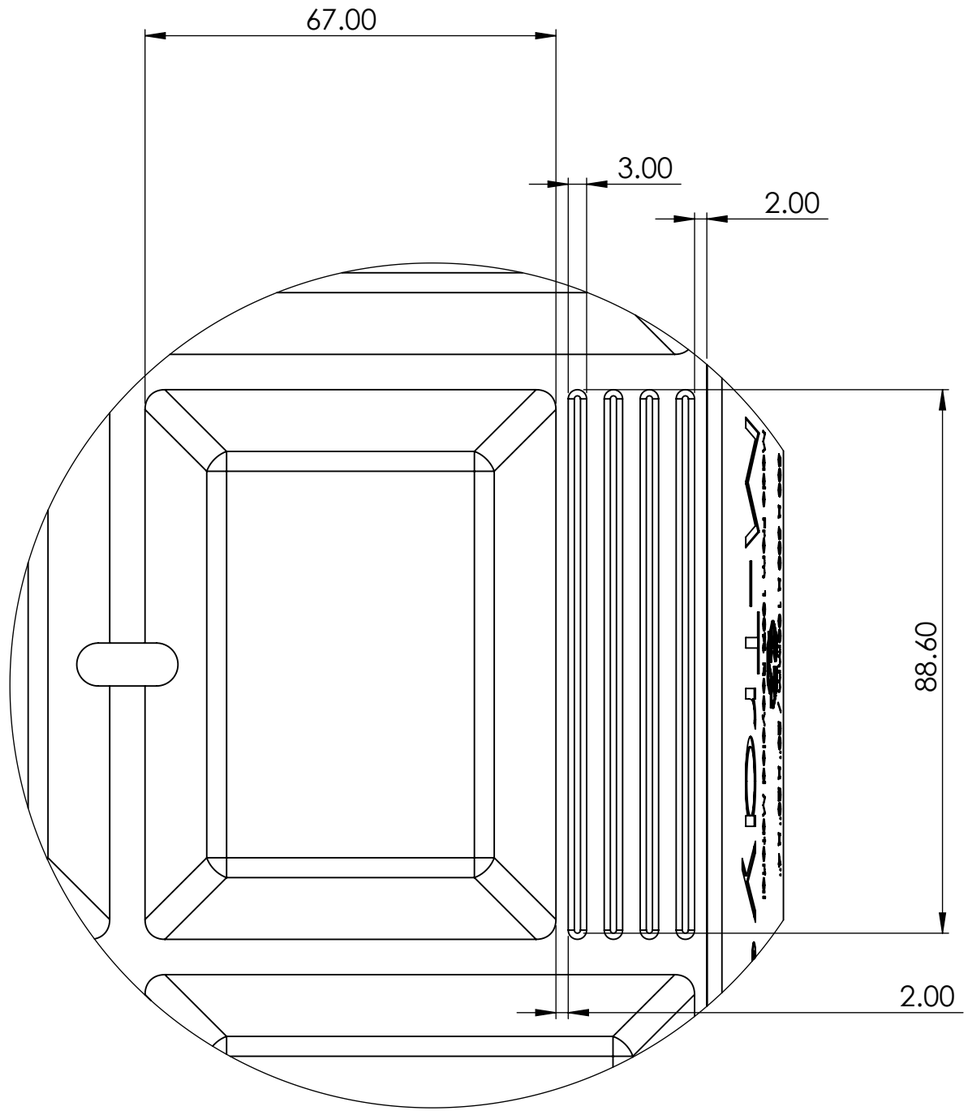

DETAIL E
SCALE 1 : 1

	DESIGNER: Wallbarn Ltd COMPANY: Wallbarn Ltd		
EMAIL: enquiries@solidpeople.co.uk PHONE: 01727 617780	TITLE: WallbarnLtd.M-Tray.v1 SIZE		
Navigation House 48 Millgate Newark NG24 4TR	**A3**	DWG. NO. 1	REV 0
			SHEET 3 OF 5
.. COMPANY PROPRIETRY NOTE .. Information on this drawing may not be disclosed without the written authorisation from the parties involved in its creation.	DRAWN BY: Benjamin Wilson DRAWN DATE: 13/04/2021		

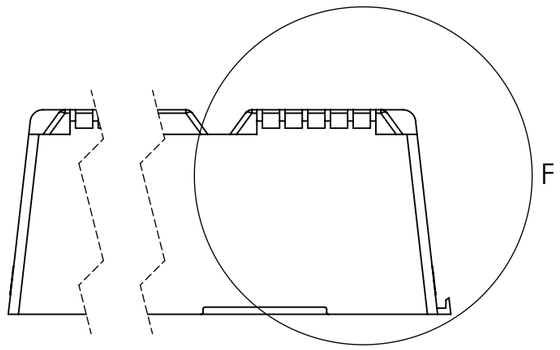

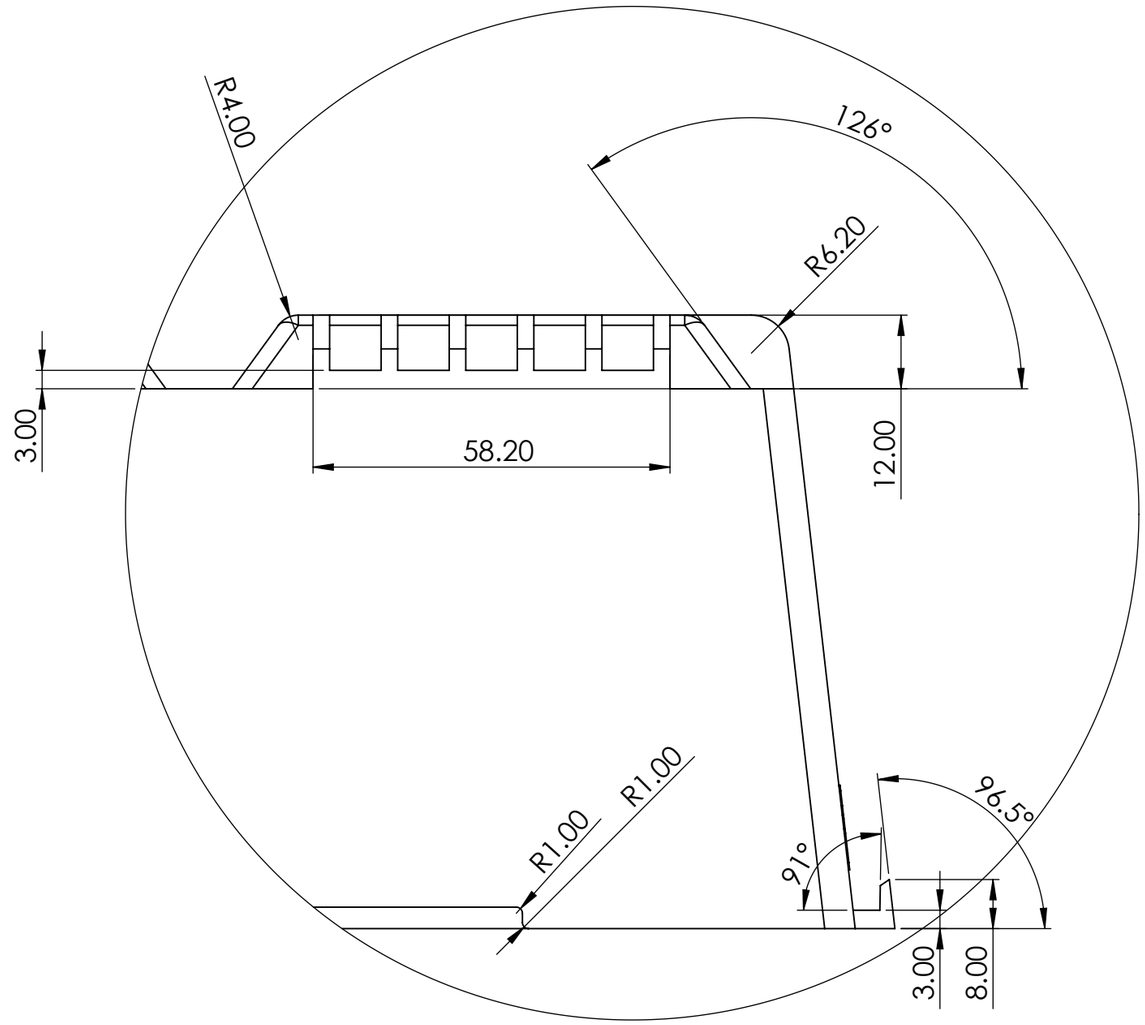

DETAIL F
SCALE 1 : 1

	DESIGNER: Wallbarn Ltd COMPANY: Wallbarn Ltd		
EMAIL: enquiries@solidpeople.co.uk PHONE: 01727 617780	TITLE: WallbarnLtd.M-Tray.v1 SIZE		
Navigation House 48 Millgate Newark NG24 4TR	**A3**	DWG. NO. 1	REV 0
			SHEET 4 OF 5
.. COMPANY PROPRIETRY NOTE .. Information on this drawing may not be disclosed without the written authorisation from the parties involved in its creation.	DRAWN BY: Benjamin Wilson DRAWN DATE: 13/04/2021		

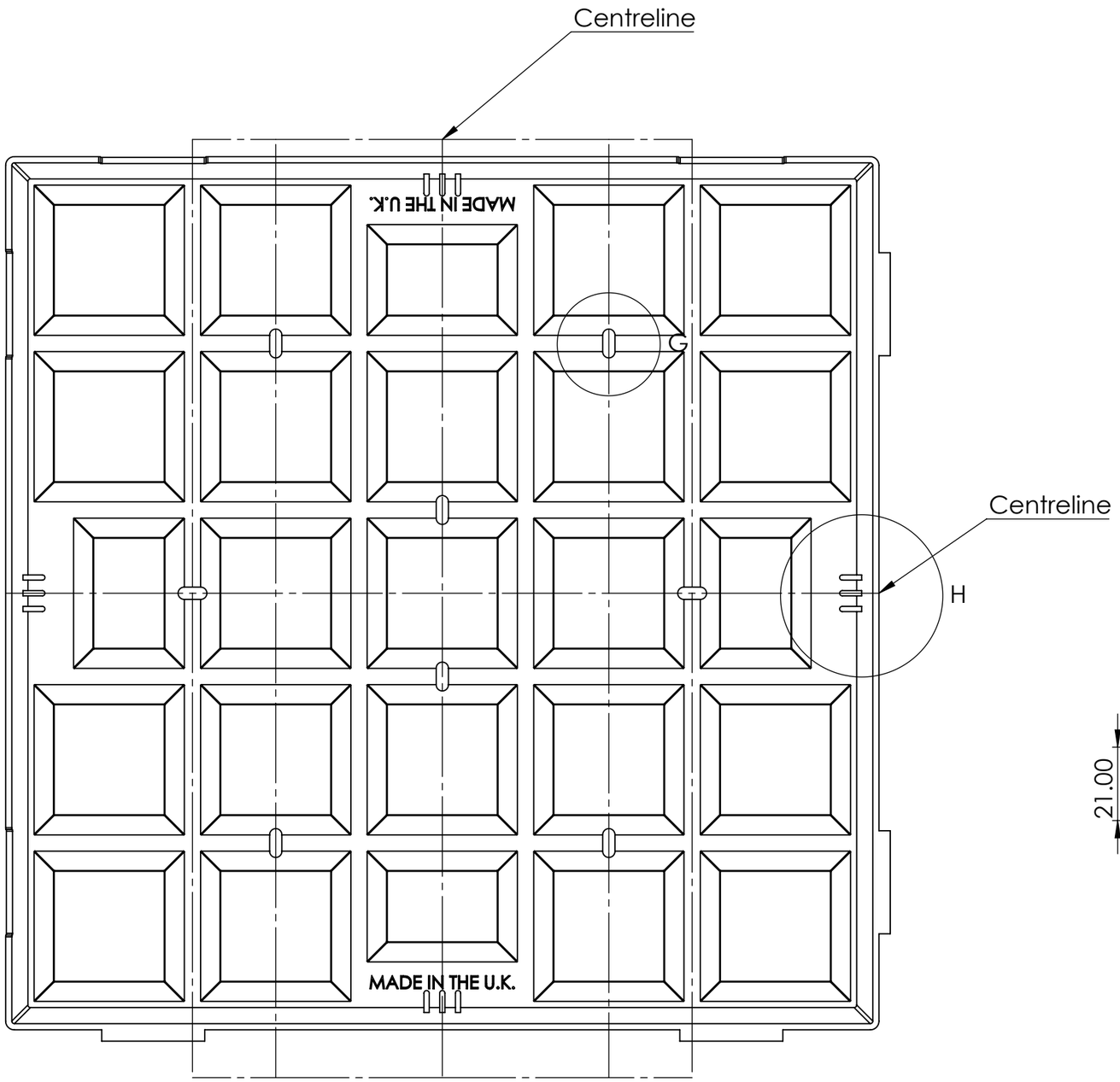

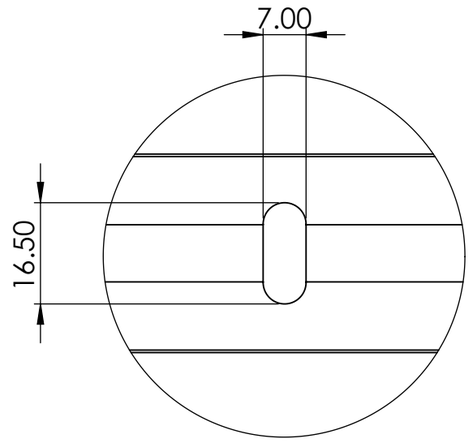

DETAIL G
SCALE 1 : 1

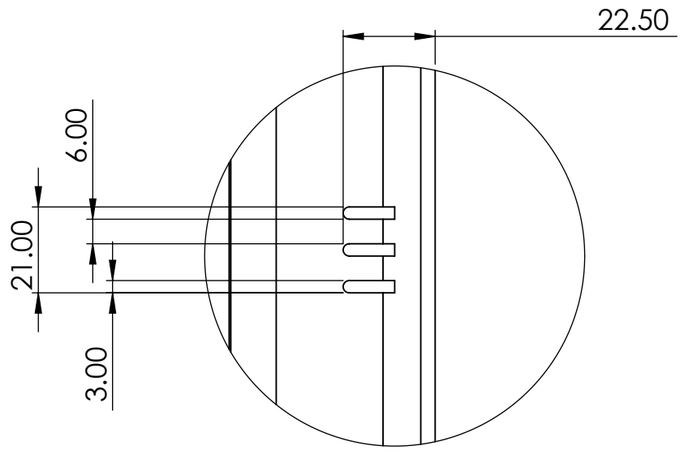

DETAIL H
SCALE 2 : 3

	DESIGNER: Wallbarn Ltd COMPANY: Wallbarn Ltd		
EMAIL: enquiries@solidpeople.co.uk PHONE: 01727 617780	TITLE: WallbarnLtd.M-Tray.v1 SIZE		
Navigation House 48 Millgate Newark NG24 4TR	**A3**	DWG. NO. 1	REV 0
			SHEET 5 OF 5
.. COMPANY PROPRIETRY NOTE .. Information on this drawing may not be disclosed without the written authorisation from the parties involved in its creation.	DRAWN BY: Benjamin Wilson DRAWN DATE: 13/04/2021		

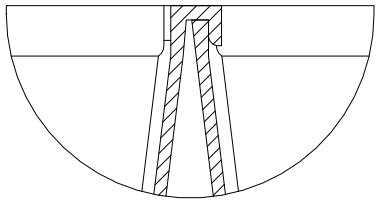

DETAIL A
INTERLOCKING FEATURE

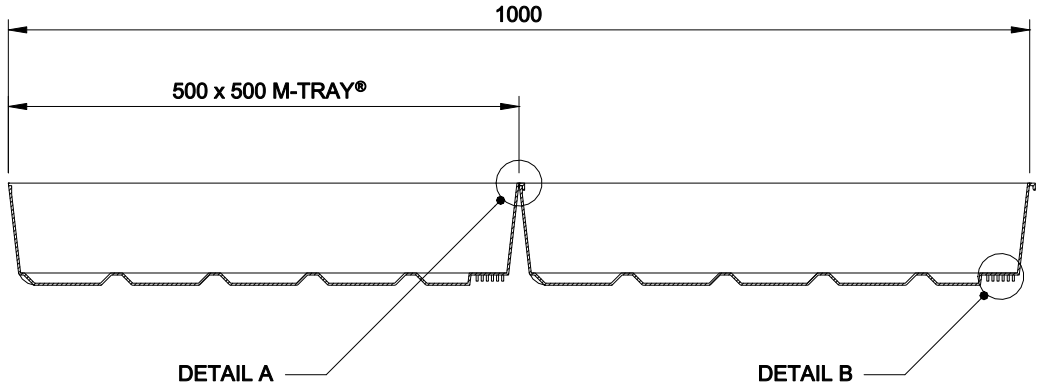

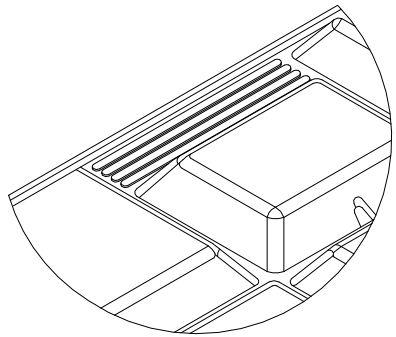

DETAIL B
HAND GRIP

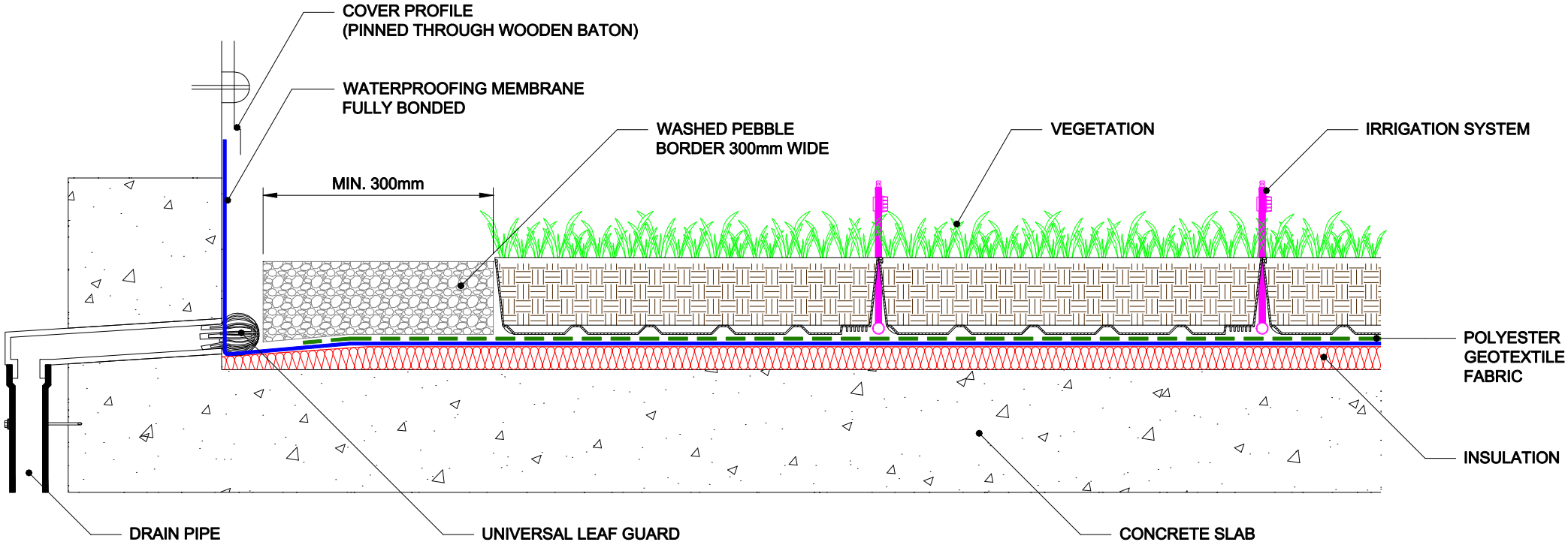

WALLBARN LIMITED
M-TRAY® SYSTEM BUILD-UP

Wallbarn Ltd
Unit 16, Capital Business Centre
22 Carlton Road
South Croydon
CR2 0BS
Tel 020 8916 2222
https://www.wallbarn.com/green-roofs/m-tray/

June 2020

Substrate Specification for Wallbarn M-Tray® Mix Weight – 800 - 900kg per bag (depending on water content)		
Main Ingredients		**% by Mass** see note below
Expanded Clay	Loose Expanded Clay 5-10mm	25%
Lytag	LytaFill 8-14mm PL BS EN 13055 LytaFill 4-8mm PL BS EN 13055	25%
Coir	Medium grade low EC	25%
PAS 100	British Standard PAS 100 with additional composting and screening	25%
pH Value	5.5 – 6.5	
EC Value	300 – 600 µS	
Added Nutrients	1 Kg /m^3 Base 7-21-21 + Trace Elements	

N.B.

Ingredients added by mass during mixing and installation.
Percentage of organics by weight in accordance with BS 8616:2019 (Specification for performance parameters and test methods for green roof substrates).

Making great sport happen

GREEN ROOF SUBSTRATE TEST RESULTS

Client: Walbarn
Substrate: Green Roof Modules

October 2020
STRI Research

Materials and Methods

Field site : Testing took place in STRI green roof substrate testing laboratory, Bingley (GPS reference 53.8474 and -1.8579).

Timing : Testing took place in October 2020

Assessments

All assessments were carried according to current STRI green roof substrate standard testing procedures (BSI 8616). All result values refer only to the substrate sample tested. STRI green roof substrate testing methods (BSI 8616) have been adapted from FLL testing procedures and therefore results are not directly comparable. STRI's laboratory is an official GRO testing house.

Physical Assessments	**Particle Size Distribution**
Bulk Density when oven dried (g cm^{-3})	Stones (>8 mm)
Bulk Density at field capacity (g cm^{-3})	Coarse gravel (8-4 mm)
Calculated bulk density at saturation (g cm^{-3})	Fine gravel (4-2 mm)
Particle Density (g cm^{-3})	Very coarse sand (2-1 mm)
Field Capacity (% v/v)	Coarse sand (1.0-0.5 mm)
Total Porosity (%)	Medium sand (0.5-0.25 mm)
Porosity at Field Capacity (%)	Fine sand (0.250-0.125 mm)
Saturated Hydraulic Conductivity (mm min^{-1})	Very fine sand (0.125-0.050 mm)
	Silt (0.050-0.002 mm)
	Clay (<0.002 mm)
Chemical Assessments	
Organic Matter (%)	
pH	
EC (mS cm^{-1}) Heavy metals (Lead, Copper, zinc, cadmium, nickel) (mg l^{-1})	
Plant available PK (mg l^{-1})	
Total N (%) C:N ratio	

Substrate composition:

Green roof module: LECA 50 %, Green Waste Compost 25 %, Coir 25%

New Mix: Lytag 8-16 mm, LECA 25 %, Green Waste Compost 25 %, Coir 25%

Specification Sheet

Table 1: Physical and selected chemical properties of Walbarn Green Roof Module Substrate. Values refer only to the substrate samples tested.

	Green Roof Module Substrate	New Mix
Substrate Density		
Bulk Density when Oven Dried	0.42 g cm^{-3}	
Bulk Density at Field Capacity	1.01 g cm^{-3}	
Calculated Bulk Density at Saturation	1.04 g cm^{-3}	
Particle Density	1.12 g cm^{-3}	
Water & Air		
Field Capacity	59.4 % v/v	
Total Porosity	62.4 %	
Porosity at Field Capacity	3.0 %	
Saturated Hydraulic Conductivity	20.1 mm min^{-1}	
Chemical		
Organic Matter	11.5 %	10.6 %
pH	7.3	
EC	3.54 mS cm^{-1}	
Plant available phosphate	342 mg l^{-1}	
Plant available potassium	957 mg l^{-1}	
Total nitrogen	1.4 %	
Lead	7.0 mg l^{-1}	
Nickel	1.1 mg l^{-1}	
Copper	6.9 mg l^{-1}	
Cadmium	0.3 mg l^{-1}	
Zinc	28.6 mg l^{-1}	
C:N ratio	4.8	
Particle Size Distribution (% weight)		
Stones (>8 mm)	20.0	
Coarse gravel (8-4 mm)	42.2	
Fine gravel (4-2 mm)	4.2	
Very coarse sand (2-1 mm)	1.9	
Coarse sand (1.0-0.5 mm)	2.3	
Medium sand (0.5-0.25 mm)	4.2	
Fine sand (0.250-0.125 mm)	4.1	
Very fine sand (0.125-0.050 mm)	3.1	
Silt (0.050-0.002 mm)	9.4	
Clay (<0.002 mm)	8.6	

Signed: **(Study Director)**

Date: October 2020

Please ensure that your Sales/Marketing Department is aware that this research has been carried out under contract and that the consent of STRI must be obtained where information contained in the report is to be used in advertising or promotional literature.

Materials Datasheet for Wallbarn M-Tray® - Polyproplene

Roof box load test DOE

Method: Edges of box supported on 48 mm (h) x 570 mm (l) blocks of wood, load applied to centre of box in 1kg increments over a 140mm diameter and deflection measured at the centre line.

Results:

Load : (KG	Deflection: (mm)
0	0
1	0.4
2	1.5
3	1.7
4	2.34
5	2.89
6	3.44
7	4.1
8	4.55
9	5.2
10	6.12
11	7.72
12	8.65
13	9.81
14	11.02
15	12.37

For more information please contact:
Wallbarn Limited
Unit 16, Capital Business Centre, 22 Carlton Road, South Croydon, CR2 0BS
T: +44 (0) 20 8916 2222 F: +44 (0) 20 8916 2223
E: sales@wallbarn.com W: wallbarn.com/green-roof-new

AXION POLYMERS

AXPOLY® PP51 1000

Product information sheet: Black copolymer polypropylene resin

Description: General purpose injection moulding compound suitable for a wide range of shaped products where consistent polymer properties are combined with reliable performance to deliver cost efficiencies without compromising on quality.

Product physical properties

Product grade: Axpoly® PP51 1000

Test parameter	ISO standard	Mean value	Units
MFI (2.16 kg @ 230°C)	1133	6	g/10mins
Density	1183 -1	0.96	g/cm^3
Tensile strength	527 - 1/2	20	MPa
Impact strength	180	9	kj/m^2
Elongation @ break	527 - 1/2	25	%
Flexural Modulus	178	980	MPa

Please note this polymer is not approved for use in food, medical or toy applications.

LLOYD'S REGISTER · LRQA ISO 9001

MADE IN BRITAIN

www.axiongroup.co.uk/AxpolyPolypropylene

Indigo Street, Off Langley Road South, Salford. M6 6RX
Tel. +44 161 737 6124
E. info@axionpolymers.com

Safety Data Sheet
PP

Issue Date: 24/02/14

acc. to EC 1907/2006

1. Substance/Preparation and Company Identification

Company: MBA Polymers UK Ltd.
Sandy Lane,
Worksop,
Nottinghamshire. S80 3ET.
United Kingdom
Tel.: +44(0) 1909 504900

Product/Trade Name:

PP2117 x yy/zz
PP2131F20 yy/zz
PP2123 x yy/zz
PP 2126 x yy/zz
PP2132 z yy/zz
PP2143 x yy/zz
PP2154 x yy/zz
PP2172 x yy/zz
PP2182 x yy/zz
(x: specific index for special product properties)
(yy/zz: Colour index following the RAL colour code system)

Use: Injection Moulding (molten plastic processing)
Synonym: Post Consumer PP Re-granulate (PCR)

2. Hazard Identification

Following the GHS criteria the product needs no identification of hazards.
Potential risks mentioned below refer to the product as a melted mass.

Potential Health Effects - Eyes: Fumes released during processing may cause eye irritation.
Potential Health Effects - Skin: Danger of burns while handling the hot product.
Potential Health Effects – Inhalation: Fumes released during processing may irritate respiratory system.

3. Composition/Information on Ingredients

CAS #	Component
9003-7-0	Polypropylene
9002-88-4	Polyethylene
n.a.	Other thermoplastic material
n.a.	Additives: UV Stabilizers, Antioxidants, Colour pigments, lubricants

4. First Aid Measures

Contact medical assistance immediately in case of an accident or an indisposition.
First Aid: Eyes: In case of contact, flush eyes with water for at least 5 minutes. Obtain medical attention if irritation persists.

First Aid: Skin: In case of contact, wash thoroughly with soap and large amounts of water. If irritation develops, get medical attention. In case of contact with molten product, cool rapidly with water and seek immediate medical attention. Do not attempt to remove molten product from skin because skin will tear easily.
First Aid: Ingestion: Due to the physical nature of this material, ingestion is unlikely to occur. If ingestion of a large amount does occur, seek medical attention.
First Aid: Inhalation: If dusts or vapours produced during thermal processing of this material are inhaled, remove to fresh air. If respiratory irritation occurs, if breathing becomes difficult, or if other symptoms develop, seek medical attention.
First Aid: Notes to Physician: No information available.

5. Fire Fighting Measures

Extinguishing media: Dry extinguishing media, foam, carbon dioxide.
Specific hazards: In case of fire carbon dioxide, carbon monoxide can be released.
Special protective equipment: Self contained breathing equipment.
Disposal: Dispose of fire debris and contaminated extinguishing water according to official regulations.

6. Accidental Release Measures

Precautions: Avoid inhalation. Keep away from sources of ignition.
Cleaning up/Taking up: Take up product by sweeping or shovelling up. Avoid raising dust. Adequate ventilation recommended.
Additional information: High risk of slipping due to leakage or spillage of the product.
Preventive environmental protection: Avoid any disposal of the product into the environment.

7. Handling and Storage

Handling: Processing machines need to have exhaust ventilation.
Storage: Store in dry and cool area. Avoid all potential sources of ignition.

8. Exposure Controls and Personal Protection

Ensuring effective ventilation at workplaces it can be assumed that threshold limits will not be reached for the following substances:
9003-7-0: Polypropylene
9002-88-4: Polyethylene
Personal protective equipment - Respiratory: In case of dust caused e.g. during handling or cutting a breathing protection with particle filter Type P1 or FFP1 is recommended.

Personal protective equipment – Hand protection: Use additional heat protection gloves when dealing with hot molten product.
Personal protective equipment – Eye protection: Wear safety glasses when dealing with hot molten product.
General safety measures: Handle in accordance with good industrial safety practice. Do not inhale dust mists or vapours. Avoid contact of hot molten product with skin.

9. Physical and Chemical Properties

Form Beads
Colour depending on colouring
Odour Slight specific odour
Softening temperature App. 75°C
Ignition temperature >320°C
Raw density: App. 0,94 g/cm^3 at RT
Bulk density: App. 500 kg/m^3
Solubility in water Insoluble

10. Stability and Reactivity

Conditions to avoid: Avoid extreme heat and all potential sources of ignition like heat, sparks and open flames. Thermal decomposition starts app. at 300°C.
Decomposition products: Monomers, oxides, hydrocarbons. Overheating of the product causes thermal degradation and generates gases and vapours.

11. Toxicological Information

Additional information: Based on our experience no adverse health effects are known if the product is handled as recommended.

12. Ecological Information

Degradability: No data available.
Additional information: Insoluble in water.

13. Disposal Considerations

Packaging: Uncontaminated packaging can be reused.
Product: Product has to be disposed according national official regulations.
Waste code number (Basel Code): B3010.

14. Transport Information

Not classified as hazardous under transport regulations.

15. Regulatory Information

EC regulations: Products does not require hazard warning label.
Other regulations: Make sure that handling with the product is in accordance with the official regulations for personal safety.

16. Other Information

Additional information:
In addition to the information given above we refer to our specific product information sheets and our processing data sheets.
The information herein is based on our current knowledge and experience. The data above does not describe product properties.
The data implies no guarantee of properties. The suitability of the product for a specific purpose can only be ensured with investigation and testing.

Technical Data Sheet

PP2154

Description

A post-consumer recycled polypropylene copolymer with enhanced flow properties for general use. Available in standard black (reference 90/04).

Material Properties

	Value	Unit	Test Method
Physical			
Density	0.93	g/cm^3	ISO 1183
Rheological			
Melt Flow Rate (230°C / 2.16 kg)	15	g/10 min	ISO 1133
Mechanical			
Tensile Stress at Yield (23°C)	17	MPa	ISO 527-2/50
Flexural Modulus (23°C)	800	MPa	ISO 178
Impact			
Notched Izod Impact Strength (23°C)	9	kJ/m^2	ISO 180/1A

Note:

The data above is provided in good faith and represents typical properties based on our current knowledge and experience. Product properties may be changed without notice. These properties are provided as a guide and should not be construed as binding specification limits or minimum values. This document does not create any liability, warranty or guarantee of product performance. It is the buyer's responsibility to determine the suitability of MBA Polymers products for the intended application. We DO NOT recommend our materials for toys or for applications that involve food contact or human oral contact or for medical applications.

Processing Information

	Value	Unit
Preprocessing		
Drying Temperature	80	°C
Drying Time	1-2	hr
Moisture Content	<0.05-0.10	%
Injection Moulding		
Melt Temperature Range	190-220	°C
Recommended Melt Temperature	200	°C
Mould Temperature Range	30-60	°C
Recommended Mold Temperature	40	°C
Extrusion		
Melt Temperature Range	180-210	°C
Recommended Melt Temperature	200	°C

Note:

The processing parameters listed above are general guidelines based on our current knowledge and experience. The suitability of the data for a specific processing method can only be ensured with investigations and tests by the end user.